Commercial 4"
Round Regress Fixture

Product Information

Description	RS4/15W-IC/20W-NIC/RD/LED/5CCT/BX
Color temp	27, 30, 35, 41, 50k
Output lumens	2000/1400
Beam angle	100°
Input volts	120-277V
Wattage	20/15W
CRI	90>
mA	515/355mA
Output volts	33-38V
IC rated	Only at 15W
Dimmable	Triac or 0-10 Dimming
Plenum rated	Chicago
Cut out	4.20″
OD	4.92″
Height	2.22″
Warranty	5 years
Packed	18

G-98522

5 Selectable Color



Color Covers

Black	Bronze	Brushed Nickel	Brushed Brass	Brushed Copper
G-48460 T/RL/4/R/CV/BK	G-22041 T/RL/4/R/CV/BZ	G-22042 T/RL/4/R/CV/BN	G-22043 T/RL/4/R/CV/BB	G-22044 T/RL/4/R/CV/BC

CRI 90+ True Colors · Wet Location · Air Tight · 100° Beam Angle · Dimmable · Wattage Selectable

CLOSET RATED · ENERGY STAR · JA8 TITLE 24 · ETL LISTED · FC

Made In China
Goodlite Products. Tinton Falls NJ 07753.

Accessories



Emergency LED Driver

15W G-48410
25W G-95525
30W G-48411
60W G-95521



BX Extension Cords

15ft G-98628
30ft G-98629

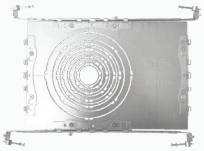

New Construction Plate

G-98800 6 Punch Out



New Construction Plate

G-98810 6 Punch Out

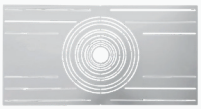

New Construction Plate

G-19982 4 Punch Out

Dimensions

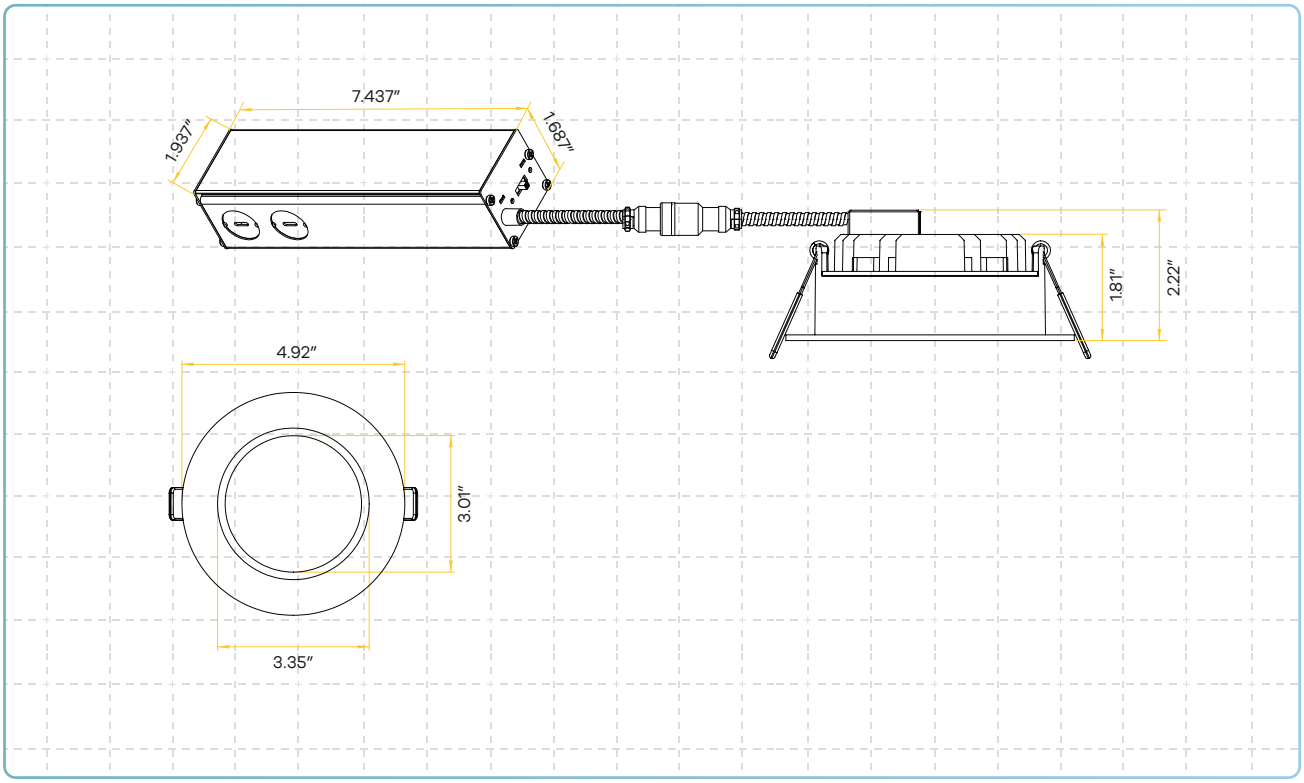

Dimmer List

Brand	Load	Model
LUTRON	150W	LECL-153P
		CTCL-150H
		LGCL-153PLH
		CTCL-153P
		SCL-153P
		PD-6WCL
		PD-5NE
		DVCL-153P
		TGCL-153P
		AYCL-153P
		MSCL-OP153M
		STCL-153M
		DVRF-6L
	250W	PD-10NXD
		DVCL253
		DVRP-253
		MRF2S-6CL
	300W	DVELV-300P
		SELVB-300P
	600W	MACL-153M
		MRF2-600M
		DVLV603
		MA-600

Brand	Load	Model
LEVITON	150W	IPL06
		6672
		6674
		RDL06-10Z
		RNL06-10Z
	300W	DSL06-1LZ
		D26HD
PASS & SEYMOUR	250W	LSCL450W
		WSCL450W
EATON	300W	DDE06-BLZ
		AAL06

0-10V Dimming

Brand	Model
LUTRON	DVSTV
	DVSCTV
LEVITON	IP710-DLZ
	DS710-10Z
LEGRAND	RH4FBL3P
COOPER	SF10P

Made In China
Goodlite Products. Tinton Falls NJ 07753.