Commercial

Selectable Color | CRI 90+ Location | Wet Location | Air Tight | 100° Beam Angle | Dimmable | Wattage Selectable

CLOSET RATED | ENERGY STAR | JA8 TITLE 24 | ETL LISTED | FC

3″

G-98521



Product Information

Description	RS5/23W-IC/32W-NIC/RD/LED/5CCT/BX	**Dimmable**	Triac or 0-10 Dimming
Color temp	27, 30, 35, 41, 50k	**Plenum rated**	Chicago
Output lumens	750/1050	**Cut out**	2.95″
Beam angle	100°	**OD**	3.70″
Input volts	120-277V	**Height**	2.38″
Wattage	15/10W	**Warranty**	5 years
CRI	90>	**Plate**	G-98800 4 Punch Out
mA	355/230mA		G-98810 4 Punch Out
Output volts	33-38V	**Packed**	18
IC rated	Only at 10W		

Color Covers for G-98521



Black
G-22030
T/RL/3/R/CV/BK



Bronze
G-22031
T/RL/3/R/CV/BZ



Brushed Nickel
G-22032
T/RL/3/R/CV/BN



Brushed Brass
G-22033
T/RL/3/R/CV/BB



Brushed Cooper
G-22034
T/RL/3/R/CV/BC

Made In China
Goodlite Products. Tinton Falls NJ 07753.

4″

G-98522



Product Information

Description	RS5/23W-IC/32W-NIC/RD/LED/5CCT/BX	Dimmable	Triac or 0-10 Dimming
Color temp	27, 30, 35, 41, 50k	Plenum rated	Chicago
Output lumens	2000/1400	Cut out	4.20″
Beam angle	100°	OD	4.92″
Input volts	120-277V	Height	2.22″
Wattage	20/15W	Warranty	5 years
CRI	90>	Plate	G-98800 6 Punch Out
mA	515/355mA		G-98810 6 Punch Out
Output volts	33-38V	Packed	18
IC rated	Only at 15W		

Color Covers for G-98522



Black
G-48460
T/RL/4/R/CV/BK



Bronze
G-22041
T/RL/4/R/CV/BZ



Brushed Nickel
G-22042
T/RL/4/R/CV/BN



Brushed Brass
G-22043
T/RL/4/R/CV/BB



Brushed Cooper
G-22044
T/RL/4/R/CV/BC

5″

G-98523



Product Information

Description	RS5/23W-IC/32W-NIC/RD/LED/5CCT/BX	Dimmable	Triac or 0-10 Dimming
Color temp	27, 30, 35, 41, 50k	Plenum rated	Chicago
Output lumens	3000/2000	Cut out	5.20″
Beam angle	100°	Height	5.94″
Input volts	120-277V	OD	2.38″
Wattage	32/23W	Warranty	5 years
CRI	90>	Plate	G-98800 8 Punch Out
mA	755/540mA		G-98810 8 Punch Out
Output volts	33-38V	Packed	12
IC rated	Only at 23W		

Color Covers for G-98523



Black
G-22050
T/RL/5/R/CV/BK



Bronze
G-22051
T/RL/5/R/CV/BZ



Brushed Nickel
G-22052
T/RL/5/R/CV/BN



Brushed Brass
G-22053
T/RL/5/R/CV/BB



Brushed Cooper
G-22054
T/RL/5/R/CV/BC

6″

G-98524



Product Information

Description	RS6/28W-IC/48W-NIC/RD/LED/5CCT/BX	Dimmable	Triac or 0-10 Dimming
Color temp	27, 30, 35, 41, 50k	Plenum rated	Chicago
Output lumens	5000/2700	Cut out	6.20″
Beam angle	100°	OD	7.09″
Input volts	120-277V	Height	2.81″
Wattage	48/28W	Warranty	5 years
CRI	90>	Plate	G-98800 9 Punch Out
mA	1280/720mA		G-98810 9 Punch Out
Output volts	33-38V	Packed	12
IC rated	Only at 50W		

Color Covers for G-98524



Black
G-22060
T/RL/6/R/CV/BK



Bronze
G-22061
T/RL/6/R/CV/BZ



Brushed Nickel
G-22062
T/RL/6/R/CV/BN



Brushed Brass
G-22063
T/RL/6/R/CV/BB



Brushed Cooper
G-22064
T/RL/6/R/CV/BC

8″

G-98526



Product Information

Description	RS6/28W-IC/48W-NIC/RD/LED/5CCT/BX	IC rated	Only at 50W
Color temp	27, 30, 35, 41, 50k	Dimmable	50W Triac or 0-10V, 80W Only 0-10V
Output lumens	8000/5000	Plenum rated	Chicago
Beam angle	100°	Cut out	8.00″
Input volts	120-277V	OD	9.55″
Wattage	80/50W	Height	2.78″
CRI	90>	Warranty	5 years
mA	2030/1300mA	Plate	G-19982 8 Punch Out
Output volts	33-38V	Packed	4

Color Covers for G-98526



Black
G-22080
T/RL/8/R/CV/BK



Bronze
G-22081
T/RL/8/R/CV/BZ



Brushed Nickel
G-22082
T/RL/8/R/CV/BN



Brushed Brass
G-22083
T/RL/8/R/CV/BB



Brushed Cooper
G-22084
T/RL/8/R/CV/BC

Made In China
Goodlite Products. Tinton Falls NJ 07753.

Accessories



Emergency LED Driver

15W G-48410
25W G-95525
30W G-48411
60W G-95521



BX Extension Cords

15ft G-98628
30ft G-98629

Note: Emergency batteries must equal or exceed the fixture's maximum wattage. Keep in mind that these fixtures feature selectable wattage.

Dimensions

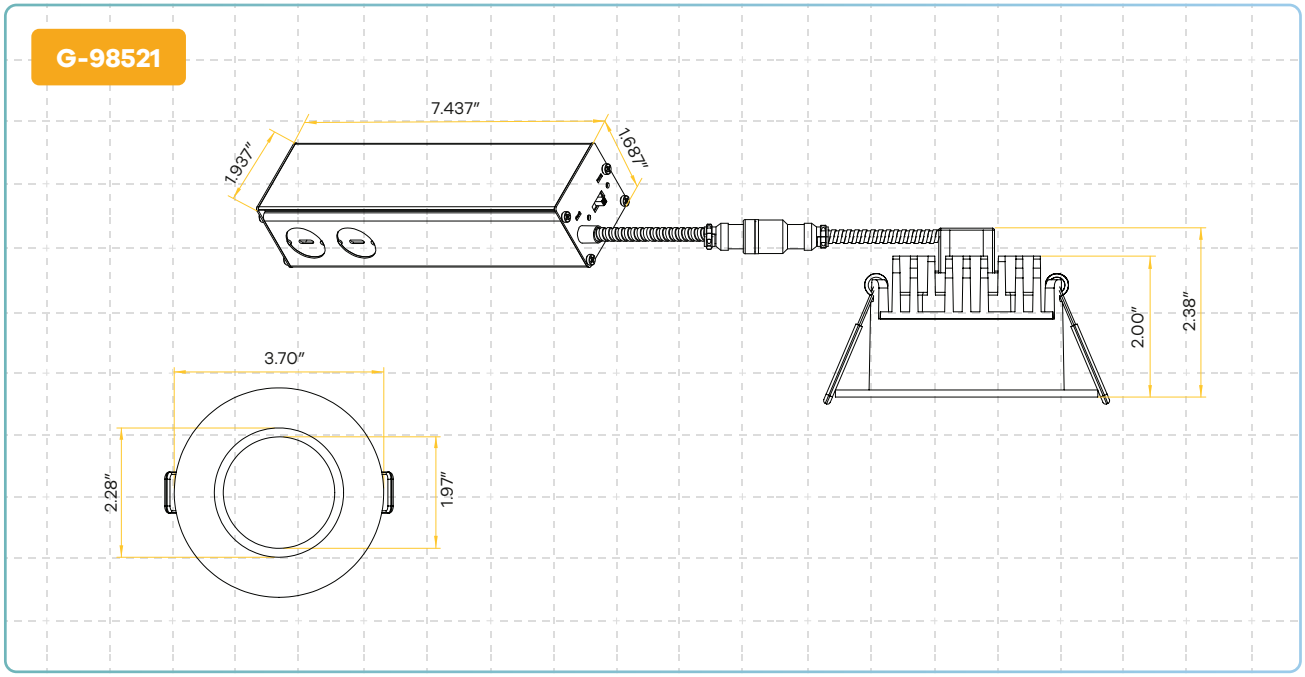

Dimensions

G-98522

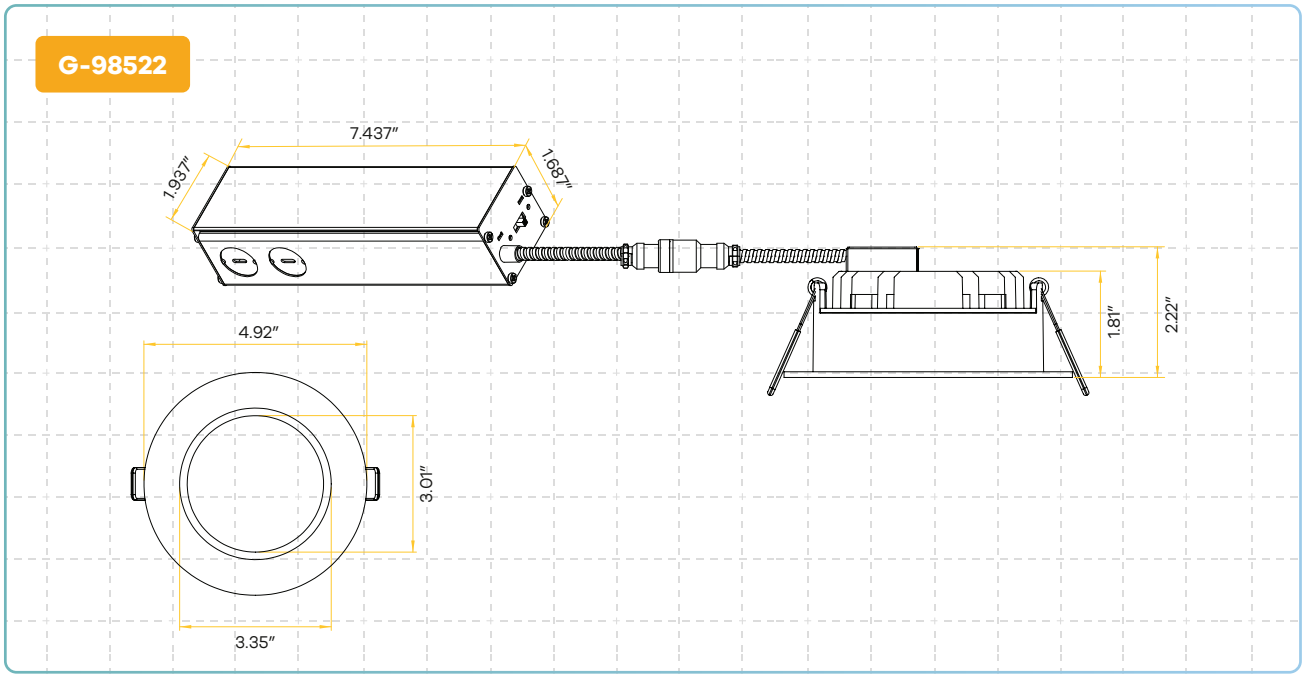

G-98523

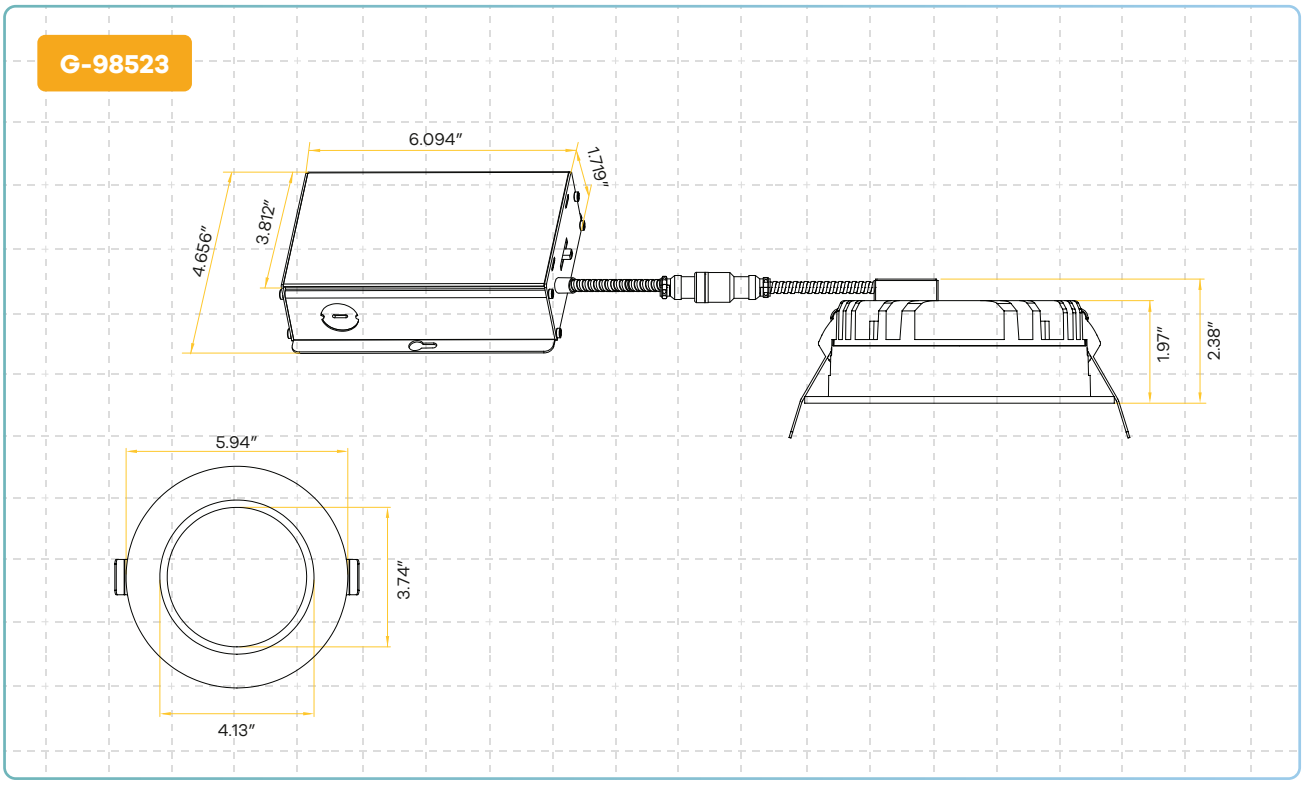

Made In China
Goodlite Products. Tinton Falls NJ 07753.

Dimensions

G-98524

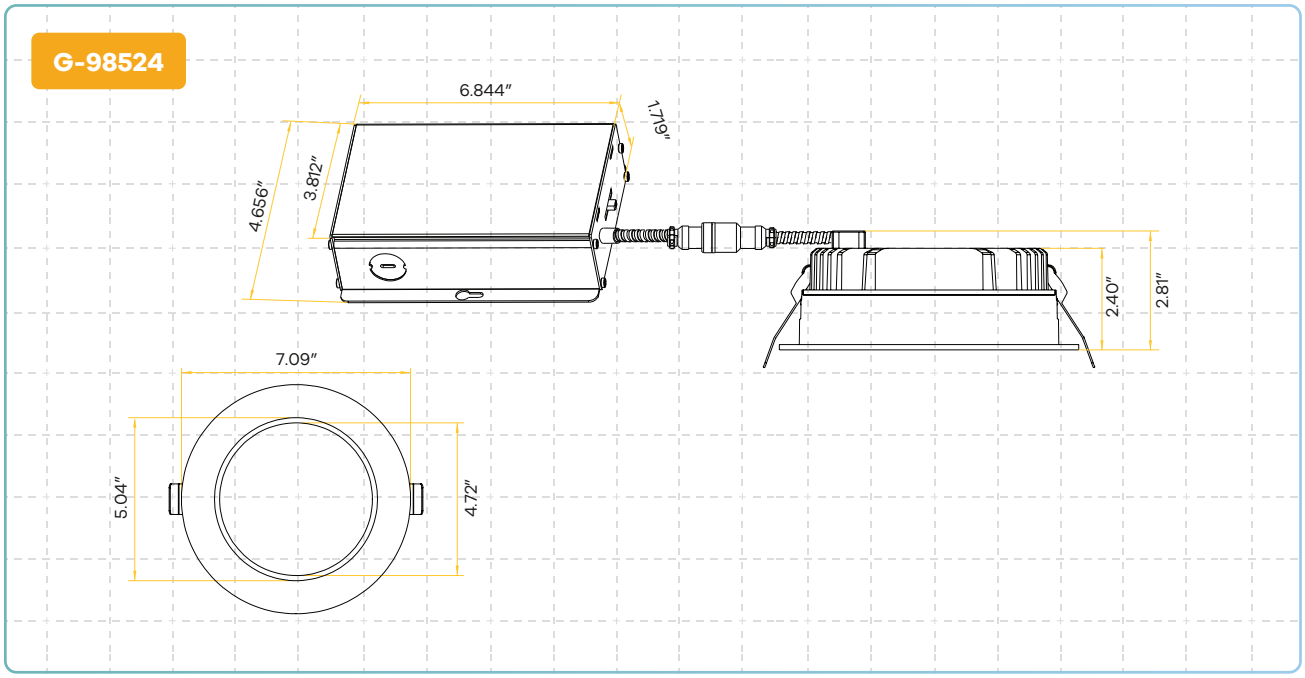

G-98526

