Electronic Driver

288W Class 2 Multi-circuit 24V (multi dimming)

Product Information

Description	288W/24V/ECV/Driver CL2
Input volts	120/277V
Input wattage	288W
Output volts	24V
Minimum load	20%
Dimmable	Triac / Phase, 0-10V, 1-10V, Potentiometer, 10V PWM
Warranty	5 Years
Height	1.77″
Length	10.74"
Width	3.97"
Pack	10

G-97527

Product Information

Output		Input	
DC voltage	24V	Voltage range	100-277 VAC
Voltage tolerance	±0.5V	Frequency range	47-63 Hz
Voltage regulation	±0.5%	Power factor	0.99 @ 120 VAC / 0.95 @ 277 VAC
Rated current	3.4A MAX	THD	<20% @ 120 VAC & 227 VAC
Rated power	3 X 96W	Efficiency	≥79% @ 120 VAC / ≥80% @ 227 VAC
Load regulation	±2%	AC current	0.5A @ 100 VAC
		Inrush current	7A, 50%, 420us @ 120 VAC / 12A, 50% 480us @ 277 VAC
		Leakage current	<0.5mA

Made In China
Goodlite Products. Tinton Falls NJ 07753.

Product Information

Protection	
Short circuit	Shut down O/P voltage, re-power on to recover after fault condition removed
Over load	≤120% shut down O/P voltage, re-power on to recover after fault condition removed
Over temperature	212° F (100°C) ±50°F (10°C) shut down O/P voltage, automatically recover after cooling

Environment	
Working temp	-40~+140°F (-40~60°C) *See derating curve
Working humidity	20~90% RH, non-condensing
Storage tem., humidity	-40- +176°F (-40~80°C), 10-95%RH
Temp coefficient	±0.03% /°C (0-50°C)
Vibration	10~500HZ, 5G 12 min/1 cycle, period for 72 min each along X,Y,Z axes

Safety & EMC			
Safety standards	UL8750, CAN/CSA-C22.2 No. 250.13		
Withstand voltage	I/P - O/P: 1.8 KVAC	I/P - FG: 1.8 KVAC	O/P - FG: 1.8 KVAC
Isolatetion resistance	I/P - O/P: 100MΩ/500VDC/25°C/70%RH		
EMC emission	FCC 47 CFR PART 15, SUBPART B		

Dimensions

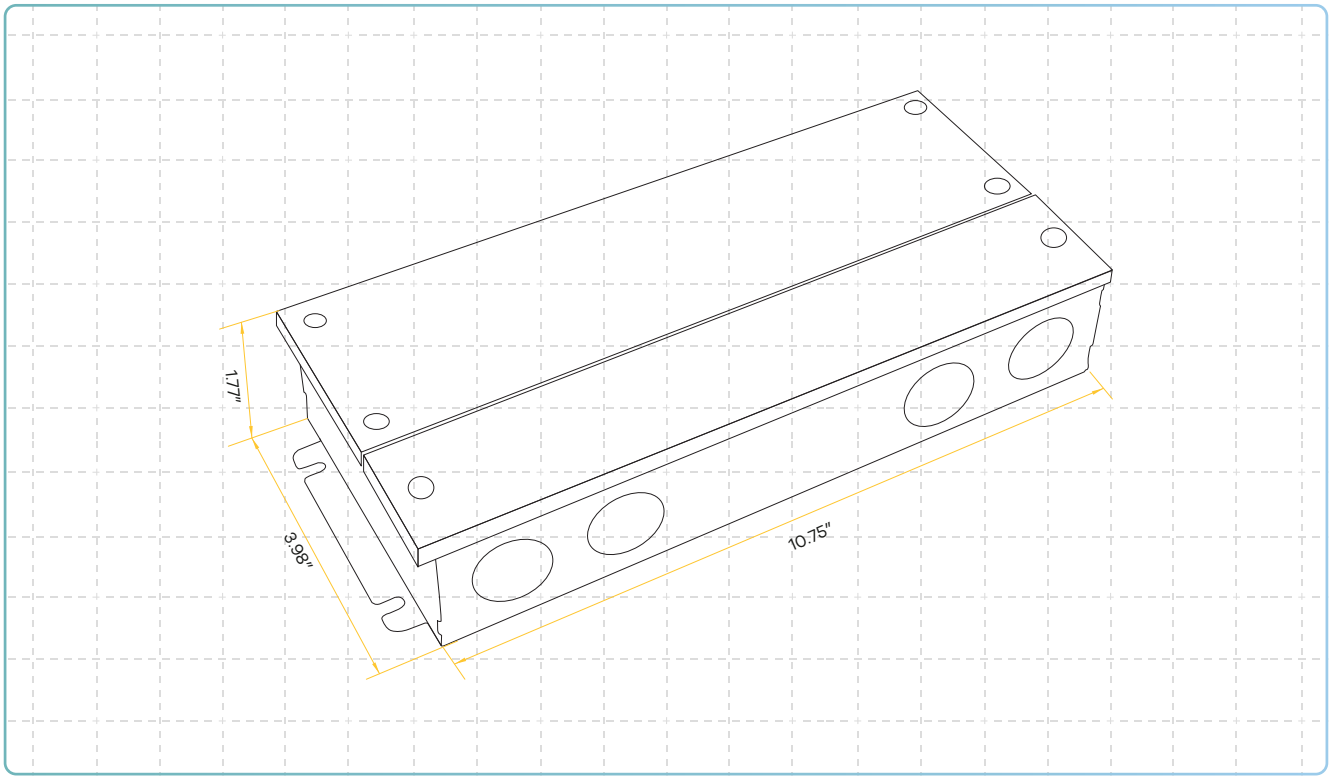

Voltage Drop Table

Wire Gauge	30W (G-97620) (1.25A)	60W (G-97621) (2.5A)	96W (G-97525) (4A)	192W (4A) (G-97526) Per Circuit	288W (G-97527) (4A) Per Circuit	384W (G-97528) (8A) Per Circuit
20 AWG	20FT	10FT	6FT	6FT	6FT	3FT
18 AWG	21FT	15FT	9FT	9FT	9FT	5FT
16 AWG	49FT	24FT	15FT	15FT	15FT	8FT
14 AWG	80FT	40FT	25FT	25FT	25FT	13FT
12 AWG	124FT	62FT	39FT	39FT	39FT	20FT
10 AWG	196FT	98FT	61FT	62FT	62FT	30FT

Dimmer List

Brand	Dimmer Model	Dimmer Categories
LUTRON	SELV-300P	TRIAC DIMMER
	DVELV-300P-WH	
	PD-5NE	
	MRF2-6ELV-120	
	MA-PRO(Maestro)	
	ST-PRO-N(Sunnata)	
	MAELV-600-WH	
	NTELV-600-WH	
	DVRP-253P	
	DVRF-5NE	
	DVRF-6L	
	MRF2-600M	
	MRF2S-6CL	
	MRF2S-6CL-WH	
	MRF2-6ND-120	
	MRF2-6CL	
	PD-6WCL-WH	
	PD-10NXD	
	MALV-600	
	MACL-153M-WH	

Brand	Dimmer Model	Dimmer Categories
LIVITEN	6672-1LW	TRIAC DIMMER
	6674-P0W	
	6672-3PW	
	6683	
	6681	
	DDE06-BLZ	
	DDMX1-BLZ	
	DZ6HD	
	DH6HD (D26HD)	
	DSL06-1LZ	
	RNL06-10Z	
	PNL06-TW	
	RDL06-TW	
	IPL06-10Z	
	IPE04-1LZ	
	VPI06	
	TBL03-10W	

Brand	Dimmer Model	Dimmer Categories
LUTRON	NTLV-600	TRIAC DIMMER
	CTCL-150-WH	
	CTCL-153PDH-WH	
	NTCL-250	
	DVCL-253P-WH	
	DVDCL-153P	
	DVCL-153P	
	AYCL-153P	
	STCL-153M(Sunnata)	
	MSCL-OP153M	
	SLV-600P-LA	
	DVLV-600P-GR	
	S600P	
	DV-600P	
	CT-103P	
	MS-Z101-WH	(0-10V) DIMMER
	DVSTV-WH(0-10)	
	RMJS-8T-DV-B	
	DVTV-WH	
	DVELV-303P	TRIAC DIMMER
	MACL-LFQ	

Brand	Dimmer Model	Dimmer Categories
EATON	DLC03P	TRIAC DIMMER
	DUL06P-C2	
	DF 10P-C1	(0-10V) DIMMER
LEGRAND	ADTP703TUW4	TRIAC DIMMER
	RHL153P	
	LSCL450	

Made In China
Goodlite Products. Tinton Falls NJ 07753.