Horizon

Selectable Color | CRI 90+ True Colors | Wet Location | Air Tight | 100° Beam Angle | Dimmable | JA8 TITLE 24 | ETL LISTED | FC | IC Rated

G-25240



Product Information

Description	R/4/FL/GBL/10W/5CCT	IC rated	Yes
Color temp	27, 30, 35, 41, 50K	Dimmable	Triac Or 0-10V
Output lumens	900	Plenum rated	FT6
Beam angle	100°	Cutout	4.25″
Tilt angle	30°	Height	1.64″
Input volts	120-277V	Width	4.96″
Wattage	10W	Plate	G-98800 6 Punch outs
CRI	90>		G-98810 6 Punch outs
mA	230mA	Packed	18

G-25260



Product Information

Description	R/6/FL/GBL/20W/5CCT	IC rated	Yes
Color temp	27, 30, 35, 41, 50K	Dimmable	Triac Or 0-10V
Output lumens	1800	Plenum rated	FT6
Beam angle	100°	Cutout	6.30″
Tilt angle	30°	Height	2.10″
Input volts	120-277V	Width	7.17″
Wattage	20W	Plate	G-98800 9 Punch outs
CRI	90>		G-98810 9 Punch outs
mA	480mA	Packed	18

Made In China
Goodlite Products. Tinton Falls NJ 07753.

Accessories



Emergency LED Driver

15W G-48410
25W G-95525
30W G-48411
60W G-95521



Multi Driver Converter

For G-25240
use 10W G-95824

For G-25260
use 20W G-95826



Extension Cords

5ft G-20247
10ft G-20248
20ft G-19822
30ft G-19823

Dimensions

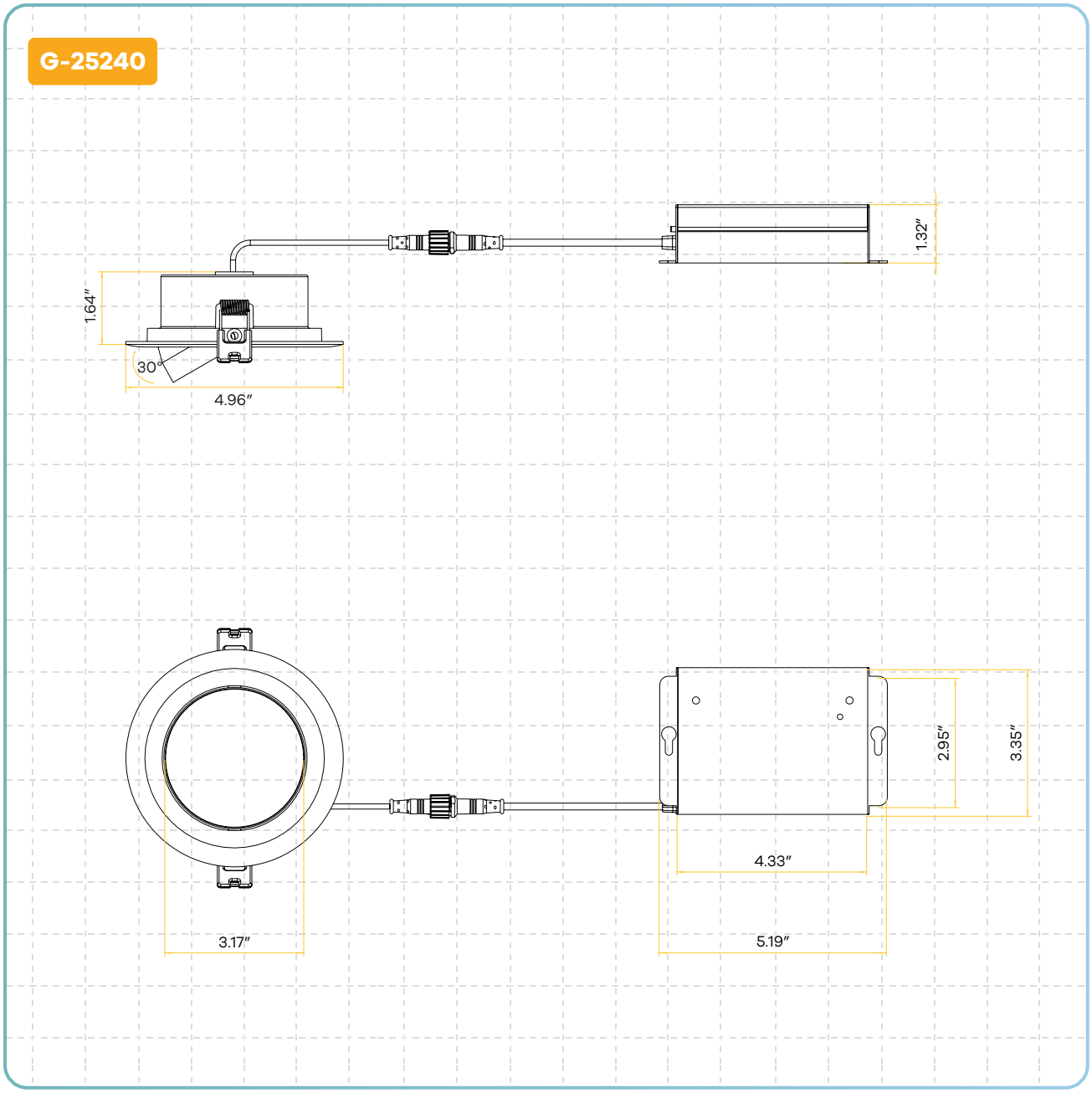

Dimensions

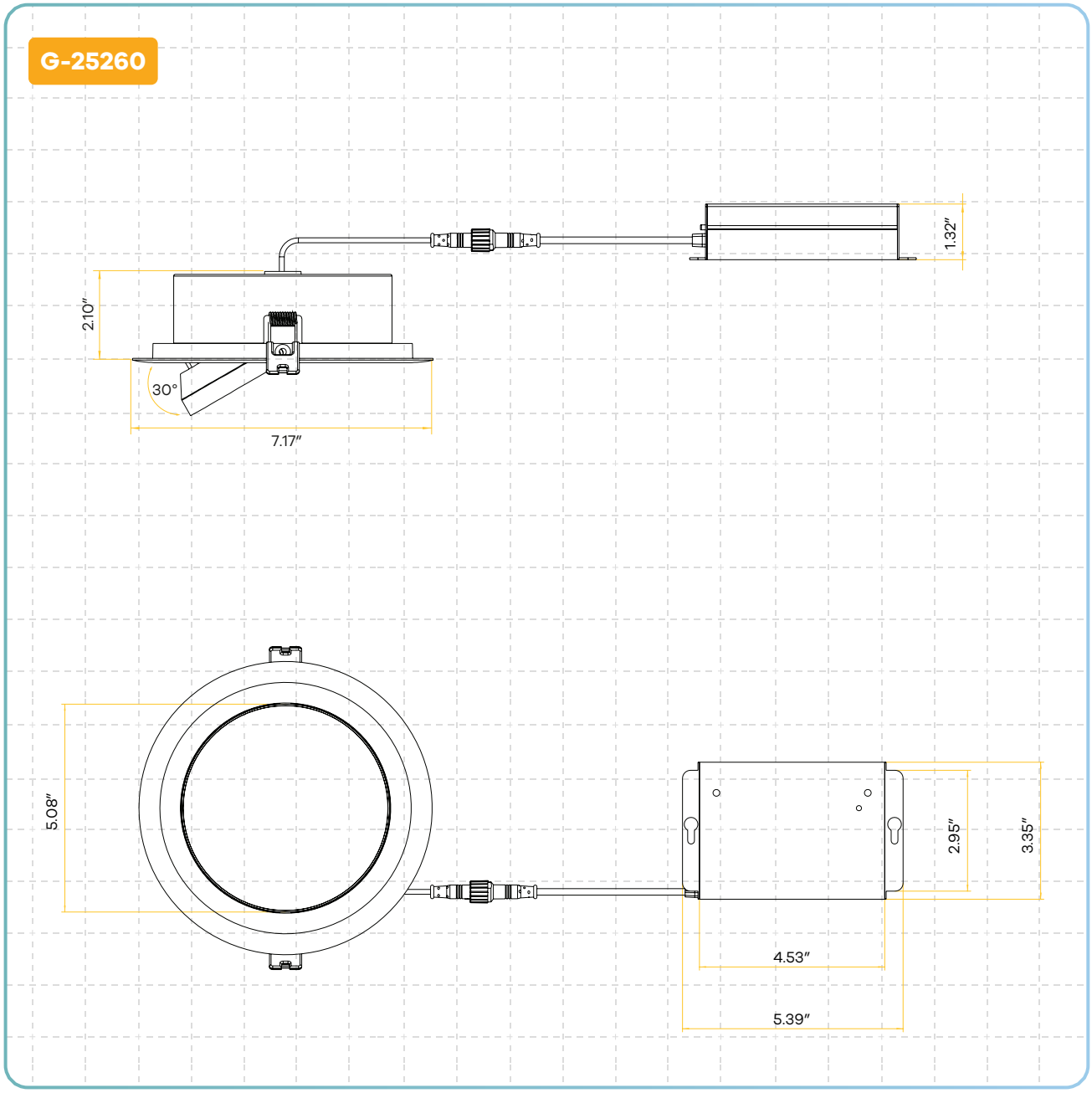

Made In China
Goodlite Products. Tinton Falls NJ 07753.