Aster Pro Round Quadruple Crossed Kit

Installation instructions

Important Safety Instructions

READ AND FOLLOW ALL SAFETY INSTRUCTIONS BEFORE INSTALLING OR SERVICING THIS FIXTURE.

⚠ WARNING: RISK OF ELECTRIC SHOCK

- This product must be installed in accordance with the National Electrical Code (NEC), local electrical codes, and applicable accident prevention regulations.
- Installation, service, and maintenance must be performed exclusively by a qualified, licensed electrician familiar with the construction, operation, and hazards involved.
- Do not install damaged products. Verify that the supply voltage matches the rating on the luminaire label. Ensure system compatibility (driver, light element, and accessories) prior to final installation; using unapproved components voids the warranty and may create unsafe conditions.
- Shut off circuit breakers to the outlet box and wall switch before installation, wiring, or servicing to prevent electric shock.
- Connect to a grounded line using a GREEN or BARE COPPER wire. Use UL-approved connectors for all connections, and wire dimming conductors as Class 1.
- Standard wiring: BLACK (Hot), WHITE (Neutral), GREEN/BARE COPPER (Ground). Reconfirm polarity in older structures. Do not damage existing insulation or disconnect unrelated junction box wires.
- Never connect components under load or disconnect the LED board while energized to avoid permanent LED damage. Do not touch the yellow LED surface or cover the lens/heatsink.
- Maintain minimum clearances of 1/2" from building structure and 3" from insulation (unless IC-rated). Operating ambient temperature must not exceed 40°C (104°F).
- Wear safety glasses and gloves. Avoid looking directly at the light source while on, and allow the fixture to cool completely before servicing.

Aster Pro Assembly Diagram

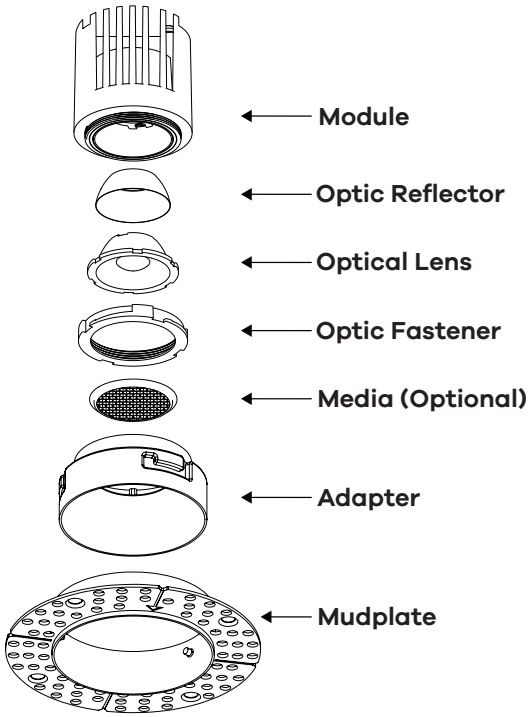

© 2026, Goodlite
Specifications and designs are subject to change without notice due to continuous development. For the latest documentation, visit www.gllite.com

sales@gllite.com
369 Essex Rd, Tinton Falls NJ 07753
P: +1-718-697-7502
F: +1-718-697-7503

Plate Installation Instructions

New Construction Pan Pre-installation Adjustments: Aster Pro New Construction Pan ships with pre-installed adjustable brackets on the pan's horizontal tracks. Both optics and media will be included with the shipment and requires onsite assembly.

Installation

1. Cut out the pan's 7.40" X 7.40" frame by inserting metal shears into the frame's two cutting slots.
2. Slide both brackets outward to match the approximate distance between the ceiling joists.
3. Align the mounting flanges flat against the bottom of the ceiling joist before mounting.
4. Nail the brackets into the studs.
5. Slide the pan to your desired location for fixtures final placement (use the center marks and ruler to align the pan with neighboring pans).
6. Tighten the bracket screws to secure the pan and prevent it from shifting.

Adjusting the Cut-out Size

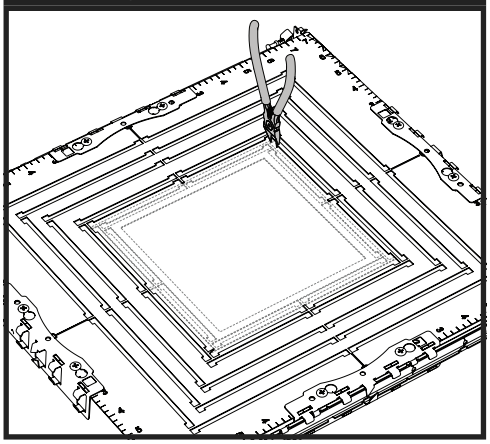

Adjusting the Brackets

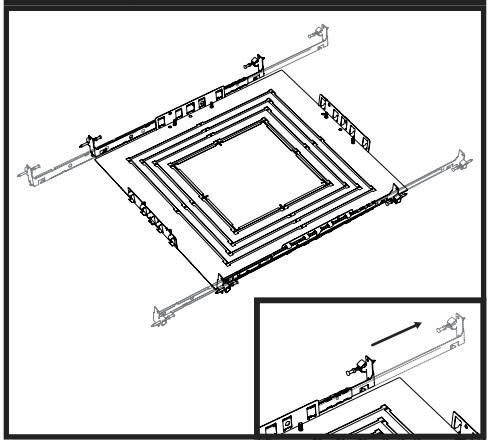

Aligning and Nailing the Brackets

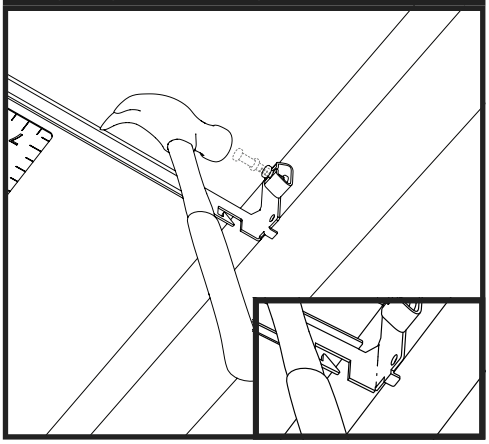

Sliding the Pan

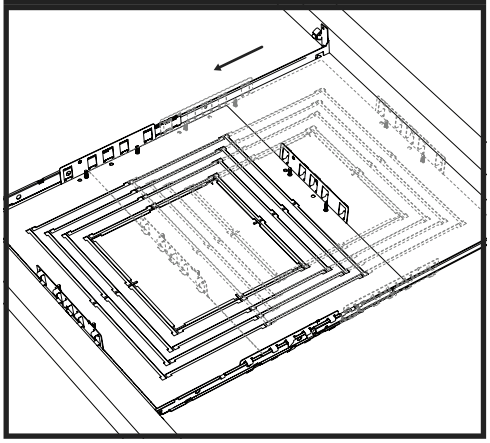

Tightening the Bracket Screws

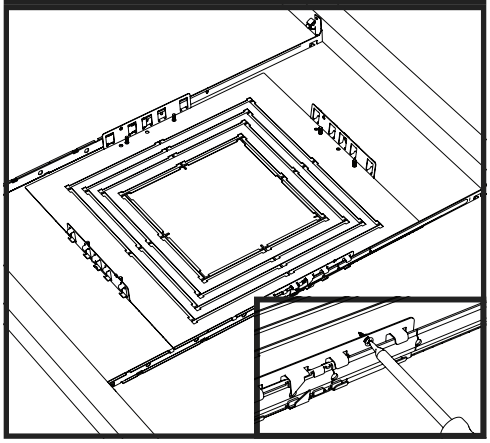

© 2026, Goodlite
Specifications and designs are subject to change without notice due to continuous development. For the latest documentation, visit www.gllite.com

sales@gllite.com
369 Essex Rd, Tinton Falls NJ 07753
P: +1-718-697-7502
F: +1-718-697-7503

Narrow Spaced Joists

For wooden joists spaced less than 7.87″ apart: Use the vertical tracks as follows.

1. Remove the brackets from the track by pressing the locking tab flat and sliding the brackets out.
2. Snap off each of the 2 brackets at their designated cutting slots.
3. Slide the adjusted brackets into the pans vertical brackets.

Removing the Brackets

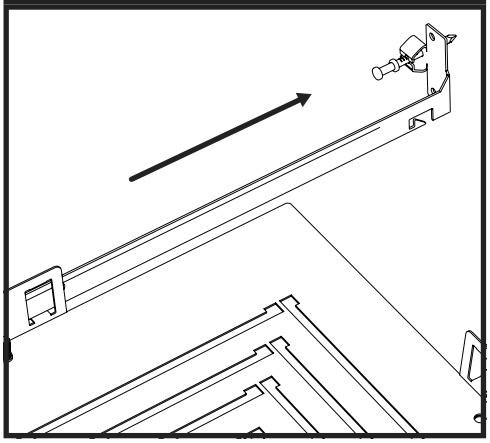

Snapping Off the Brackets

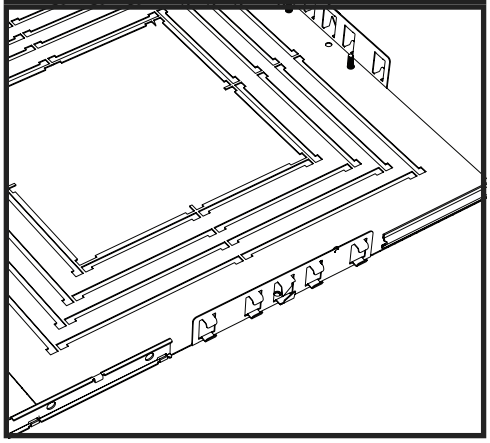

Sliding the Brackets Into the Pan

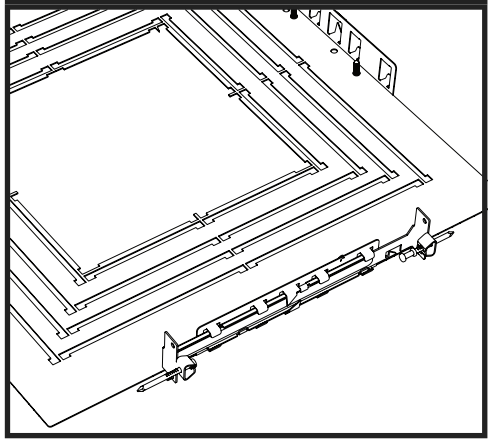

T-Grid (Drop Ceiling) Mounting

1. Adjust the brackets locking tab aside.
2. Place the brackets on the girds.
3. Firmly press the tab back to its original direction.

Adjusting the Brackets

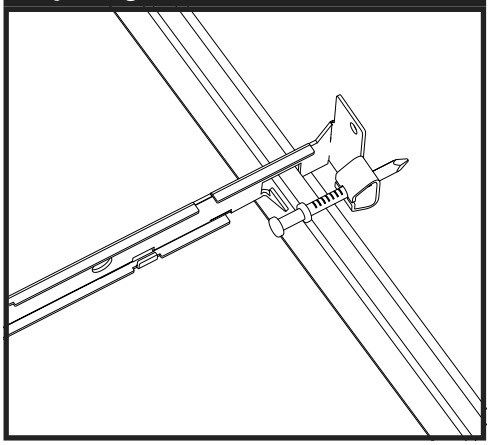

Placing the Brackets

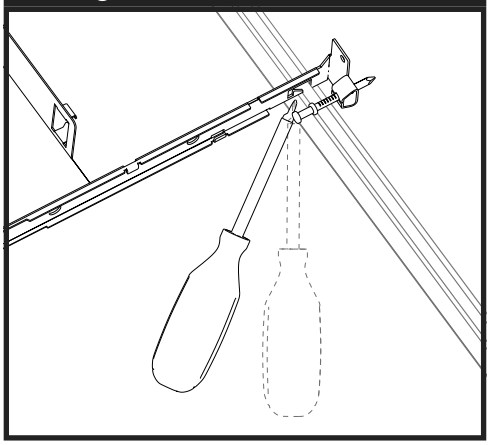

Final Look

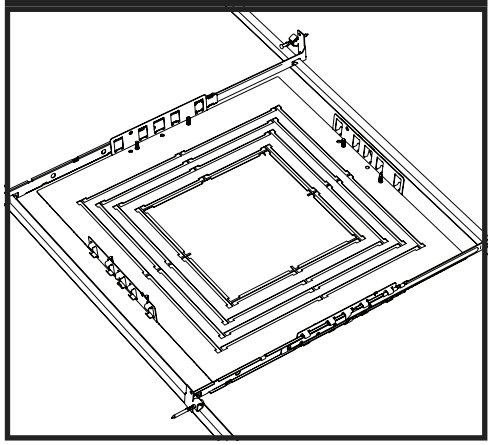

© 2026, Goodlite
Specifications and designs are subject to change without notice due to continuous development. For the latest documentation, visit www.gllite.com

sales@gllite.com
369 Essex Rd, Tinton Falls NJ 07753
P: +1-718-697-7502
F: +1-718-697-7503

Metal / Chicago Bar Mounting

1. Remove the tracks and brackets by removing its screws.
2. Using the pans screw holes, mount the pan to the bars flat surface.

1. Remove the Tracks and Brackets

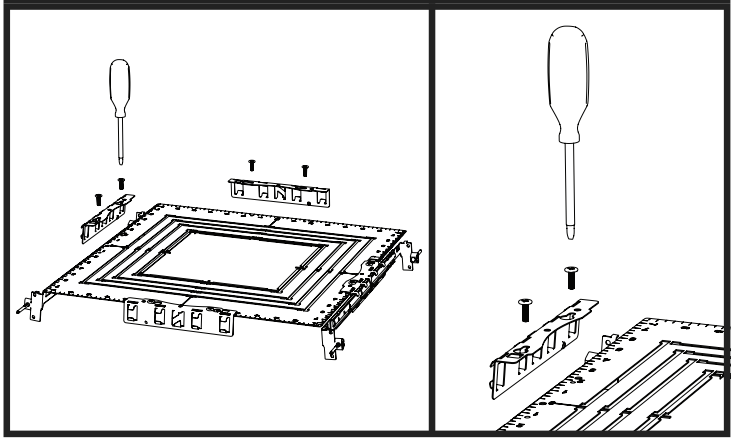

2. Mount the Pan to Bars

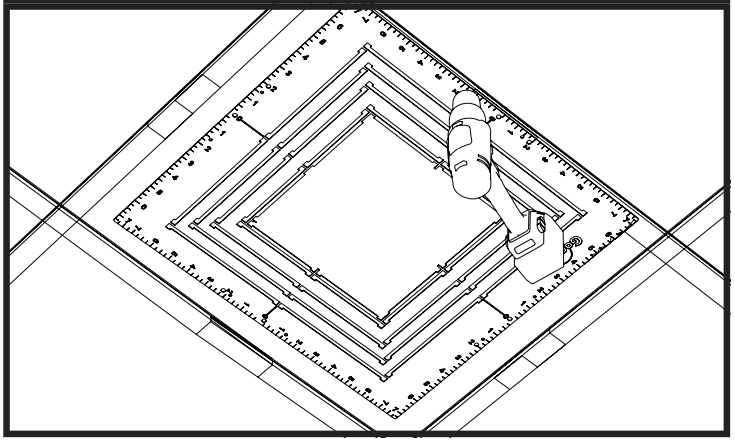

Driver Wiring and Installation

1. Disconnect power at the main circuit breaker and verify that power is OFF before starting installation or servicing.
2. Locate the 12-square-inch junction box and knock out the designated opening using a flat-blade screwdriver and hammer.
3. Secure a UL-listed conduit connector to the opening and route the supply wires through the fitting.
4. WiringConnect supply wires to the driver using approved wire connectors per the wiring diagram.
5. Remove the low-voltage rubber protectors and connect the 0–10V dimmer control wires to the driver's low-voltage leads, matching colors directly (Purple: Positive Dim +, Brown: Negative Dim -). Note: Ensure all unused wires remain capped.
6. Place the junction box above the ceiling, ensuring adequate clearance for the fixture.
7. Fasten the driver to the pan using screws through the designated mounting holes.

Driver Wiring Diagram

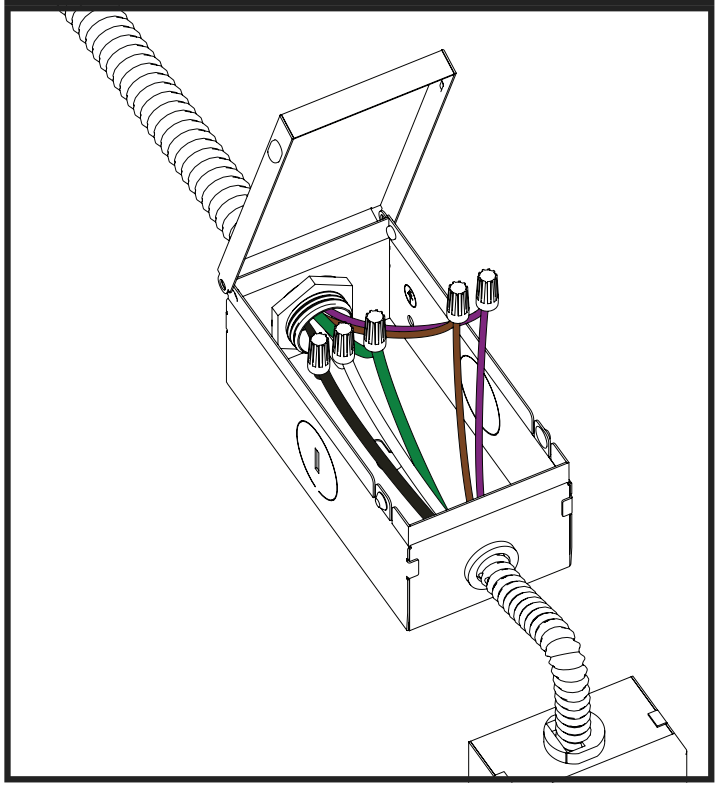

© 2026, Goodlite
Specifications and designs are subject to change without notice due to continuous development. For the latest documentation, visit www.gllite.com

sales@gllite.com
369 Essex Rd, Tinton Falls NJ 07753
P: +1-718-697-7502
F: +1-718-697-7503

Standard Wiring Diagram

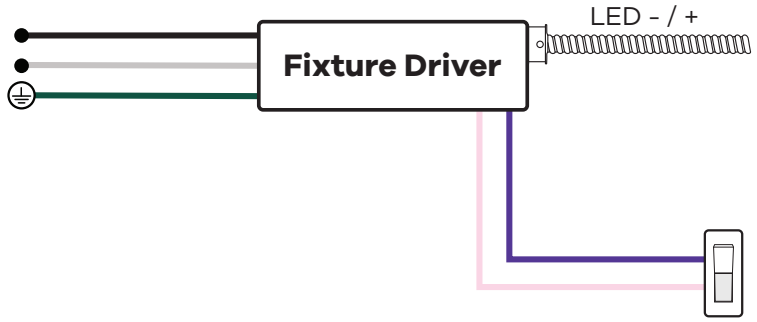

Fixture Wiring Colors

Black	-	Line (Pairs with Purple)
White	-	Neutral (Pairs with Brown)
Green	-	Ground
Purple	-	Dimm + (Pairs wit Green)
Grey/Pink	-	Dimm - (Pairs wit Yellow)

Wiring Installation

1. Disconnect power at the main circuit breaker and verify that power is OFF before starting installation or servicing.
2. Follow the wiring pairing guide for each step.
3. Remove the low-voltage rubber protectors and connect the 0–10V dimmer control wires to the Battery low-voltage leads, pairing colors indicated on guide (Purple: Positive Dim +, Brown: Negative Dim -).
   Note: Ensure all unused wires remain capped.
4. Connect the test button wiring to ensure the batter is operating properly.

Emergency Driver Wiring Diagram

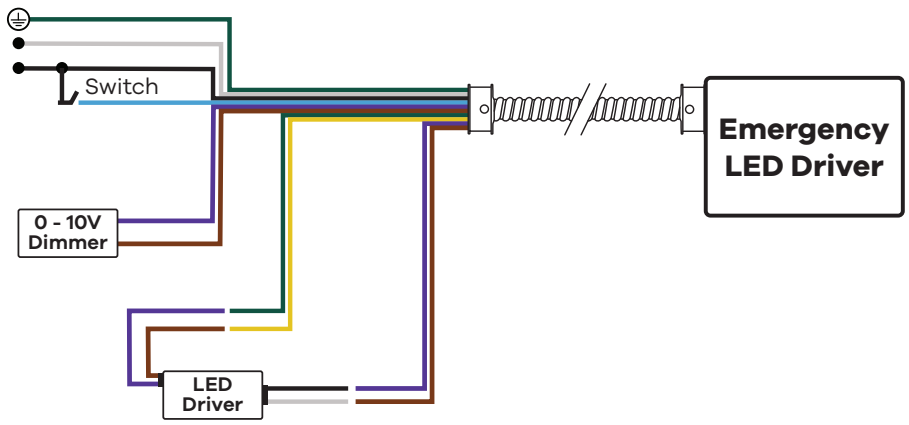

Wiring Color Code

Black	-	AC Line
White	-	AC Neutral
Yellow/Green	-	Ground
Blue	-	Indicator (Pairs with wall switch L out)
Purple	-	Line(Pairs with Driver L input)
Brown	-	Neutral (Pairs with Driver N input)
Green	-	0-10V + (Pairs with Driver +)
Yellow	-	0-10V - (Pairs with Driver -)
Purple	-	0-10V Dimm + (Pairs with Dimmer +)
Pink	-	0-10V Dimm - (Pairs with Dimmer -)

NOTE: The LED driver supports remote installation applications. By using an approved extension cord, the driver can be positioned up to 100 feet away from the light module while maintaining strict voltage stability.

© 2026, Goodlite
Specifications and designs are subject to change without notice due to continuous development. For the latest documentation, visit www.gllite.com

sales@gllite.com
369 Essex Rd, Tinton Falls NJ 07753
P: +1-718-697-7502
F: +1-718-697-7503

Driver Installation Diagram

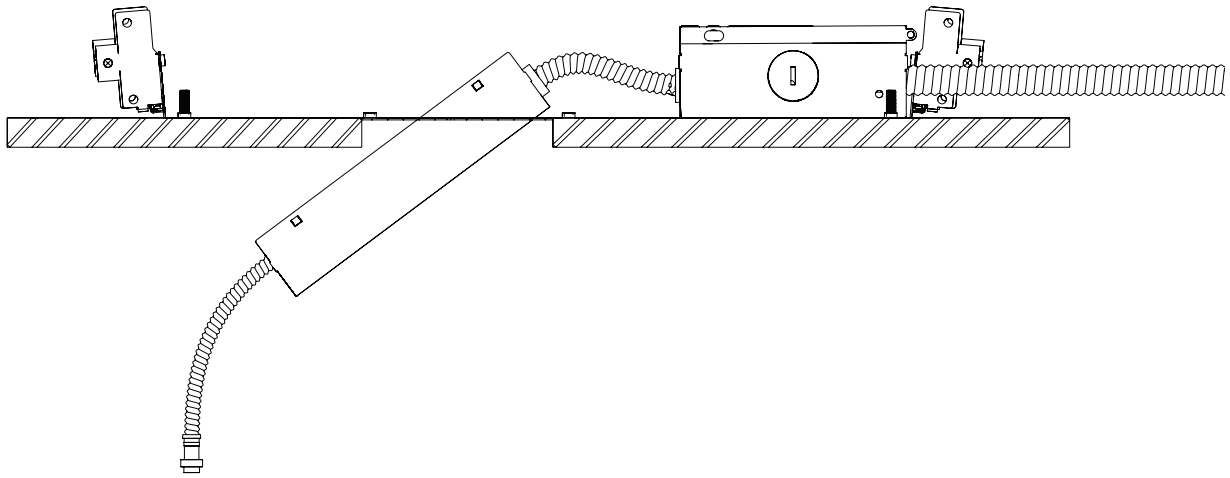

Fixture Assembly: Optic and Media

Aster Pro Downlights include your selected optic and optional optical media, which require assembly on site.

Optic Installation

1. Rotate the optic fastener counterclockwise to remove it. Take the diode protector out of the fastener.
2. Insert the optic into the optic reflector, then place both into the module.
3. Reattach the optic fastener by turning it clockwise until snug-tight.

Removing the Diode Protector

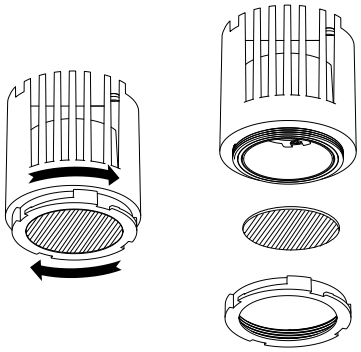

Inserting the Optic

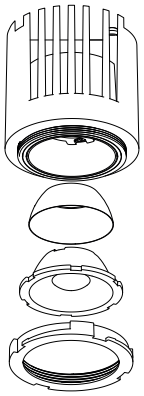

Reattaching the Optic Fastener

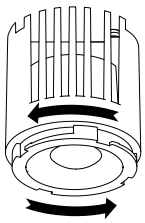

© 2026, Goodlite
Specifications and designs are subject to change without notice due to continuous development. For the latest documentation, visit www.gllite.com

sales@gllite.com
369 Essex Rd, Tinton Falls NJ 07753
P: +1-718-697-7502
F: +1-718-697-7503

Fixture Assembly: Optic and Media

Media Installation (Optional)

1. Place the media disk into the inner aperture of the trim.
2. Position the fixture into the trim, aligning the optic fastener with the trim bolts.
3. Twist the trim counterclockwise until snug-tight.

Placing the Media

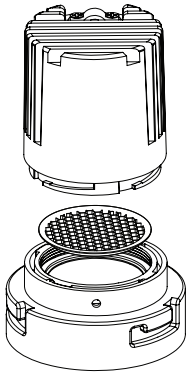

Positioning the Fixture

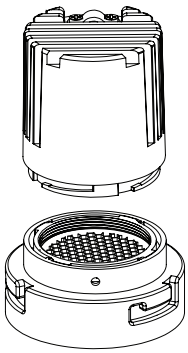

Rotating Trim Until Tight.

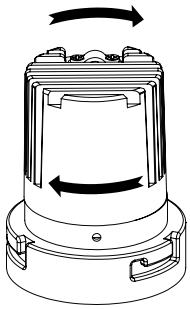

Ceiling Installation

Marking the Cutout Area

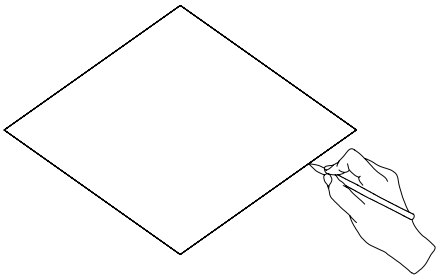

Cutting Along the Marked Line

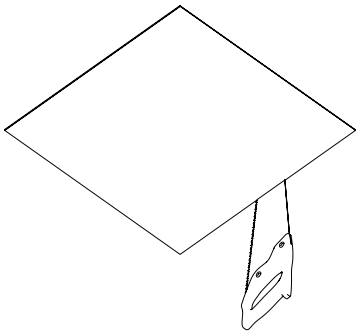

Aligning and Nailing the Brackets

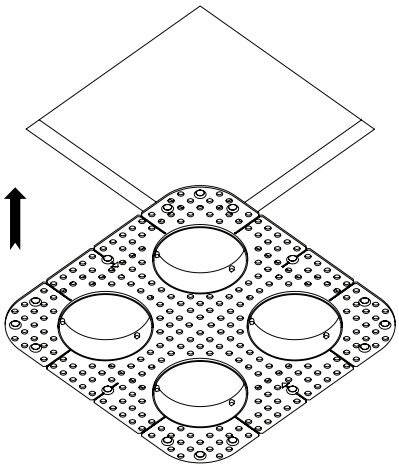

© 2026, Goodlite
Specifications and designs are subject to change without notice due to continuous development. For the latest documentation, visit www.gllite.com

sales@gllite.com
369 Essex Rd, Tinton Falls NJ 07753
P: +1-718-697-7502
F: +1-718-697-7503

Ceiling Installation

Mounting the Mud Plate with Drywall Screws

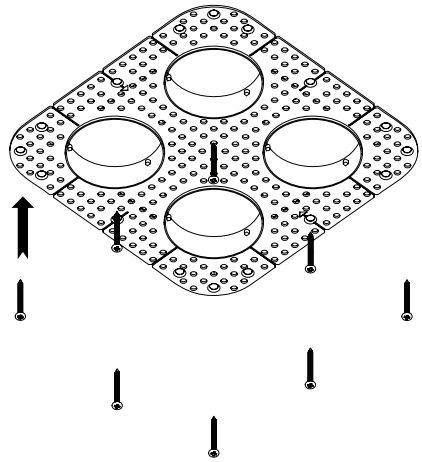

Inserting the Plaster Protector

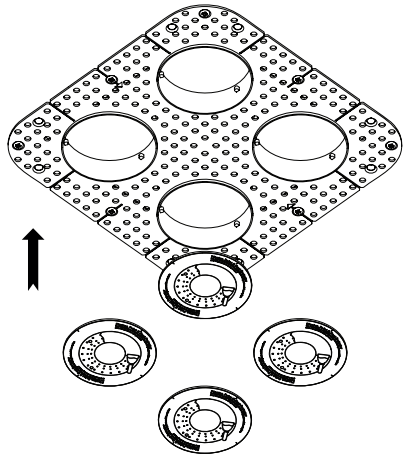

Plastering and Sanding

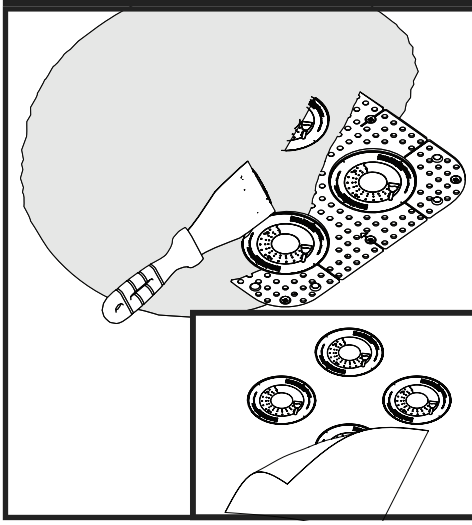

Keeping Protector for Painting

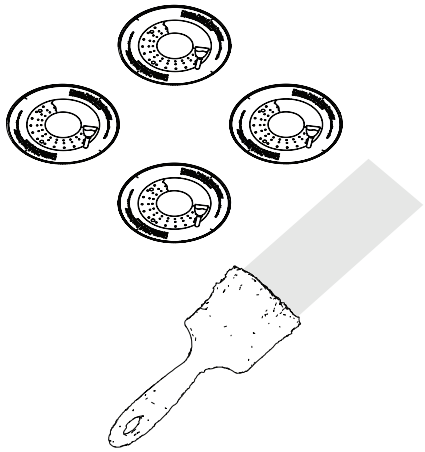

Removing the Protector

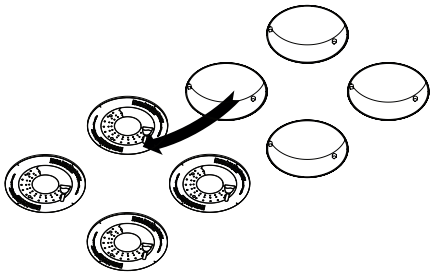

Attaching the Adapter to the Module

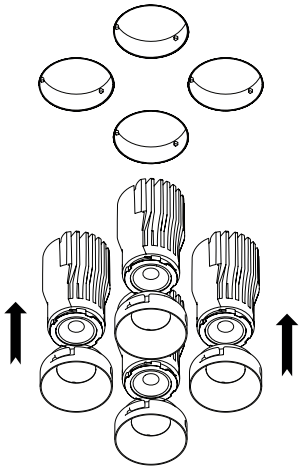

Inserting into the Mud Plate

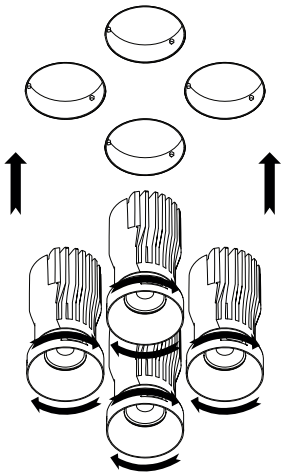

Final Look

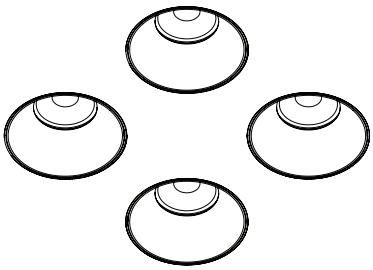

© 2026, Goodlite
Specifications and designs are subject to change without notice due to continuous development. For the latest documentation, visit www.gllite.com

sales@gllite.com
369 Essex Rd, Tinton Falls NJ 07753
P: +1-718-697-7502
F: +1-718-697-7503