Goodlite

Regulus Round Trimless Regress

5 Selectable Color | 90+ CRI 90+ True Colors | Wet Location | 100° Beam Angle | Dimmable | IC Rated | CLOSET RATED | JA8 TITLE 24 | ETL LISTED | FC

2″ G-96720



Product Information

Description	RS2/WS2/R/LED/TL/5CCT	mA	180mA/275mA
Color temp	27, 30, 35, 41, 50k	Dimmable	Triac Or 0-10V Dimming
Trim finish	White	Cut out	2.28″
Output lumens	550/825	OD	3.94"
Beam angle	100°	Height	2.32"
Input volts	120/277V	Warranty	3 Years
Wattage	8W/12W	Plate	G-98800 3 Punch Out
CRI	90>	Packed	18

3″ G-96721



Product Information

Description	RS3/10W/R/LED/TL/5CCT	mA	230mA
Color temp	27, 30, 35, 41, 50k	Dimmable	Triac Or 0-10 Dimming
Trim finish	White	Cut out	2.72″
Output lumens	750	OD	4.52"
Beam angle	100°	Height	1.81"
Input volts	120/277V	Warranty	3 Years
Wattage	10W	Plate	G-98800 3 Punch Out
CRI	90>	Packed	18

4″ G-96722



Product Information

Description	RS4/15W/R/LED/TL/5CCT	mA	230mA
Color temp	27, 30, 35, 41, 50k	Dimmable	Triac Or 0-10 Dimming
Trim finish	White	Cut out	3.85"
Output lumens	1300	OD	6.29"
Beam angle	100°	Height	2.00"
Input volts	120/277V	Warranty	3 Years
Wattage	15W	Plate	G-98800 6 Punch Out
CRI	90>	Packed	18

Made In China
Goodlite Products. Tinton Falls NJ 07753.

Accessories



Emergency LED Driver

15W G-48410
25W G-95525
30W G-48411
60W G-95521



Multi Driver Converter

For G-96720
use 8W G-95823
use 12W G-95824
For G-96721
use 10W G-95824
For G-96722
use 14W G-95825



Extension Cords

5ft G-20247
10ft G-20248
20ft G-19822
30ft G-19823

Note: Emergency batteries must equal or exceed the fixture's maximum wattage. Keep in mind that these fixtures feature selectable wattage.

Multihead Accessories for G-96720

Round Double Head Trimless Kit
G-90102

Description	1/RD/2H/W/TL/MK
Plate	G-98821 1 Punch Out

Round Triple Head Trimless Kit
G-90103

Description	1/RD/3H/W/TL/MK
Plate	G-48449 0 Punch Out

Round Quadruple Head Trimless Kit
G-90104

Description	1/RD/4H/W/TL/MK
Plate	G-98821 5 Punch Out

Round Quadruple Head Trimless Square-Kit
G-90100

Description	1/RD/4H-SQ/W/TL/MK
Plate	G-98818 0 Punch Out

Millwork Accessories for G-96720



White
G-21710

Description TL/MLW/1/RD/WT



Black
G-21711

Description TL/MLW/1/RD/BK



Bronze
G-21712

Description TL/MLW/1/RD/BZ



Brushed Nickel
G-21713

Description T2/TL/MLW/1/RD/BN



Brushed Brass
G-21714

Description TL/MLW/1/RD/BB

Multihead Accessories for G-96722

Round Double Head Trimless Kit
G-90002

Description	3.5/RD/2H/W/TL/MK
Plate	G-98817 1 Punch Out

Round Triple Head Trimless Kit
G-90003

Description	3.5/RD/3H/W/TL/MK
Plate	G-98817 2 Punch Out

Round Quadruple Head Trimless Kit
G-90004

Description	3.5/RD/4H/W/TL/MK
Plate	G-98817 4 Punch Out

Round Quadruple Head Trimless Square-Kit
G-90000

Description	3.5/RD/4H-SQ/W/TL/MK
Plate	G-98818 4 Punch Out

Millwork Accessories for G-96722



White
G-21700

Description TL/MLW/3.5/RD/WT



Black
G-21701

Description TL/MLW/3.5/RD/BK



Bronze
G-21702

Description TL/MLW/3.5/RD/BZ



Brushed Nickel
G-21703

Description TL/MLW/3.5/RD/BN



Brushed Brass
G-21704

Description TL/MLW/3.5/RD/BB

Made In China
Goodlite Products. Tinton Falls NJ 07753.

Dimensions

G-96720

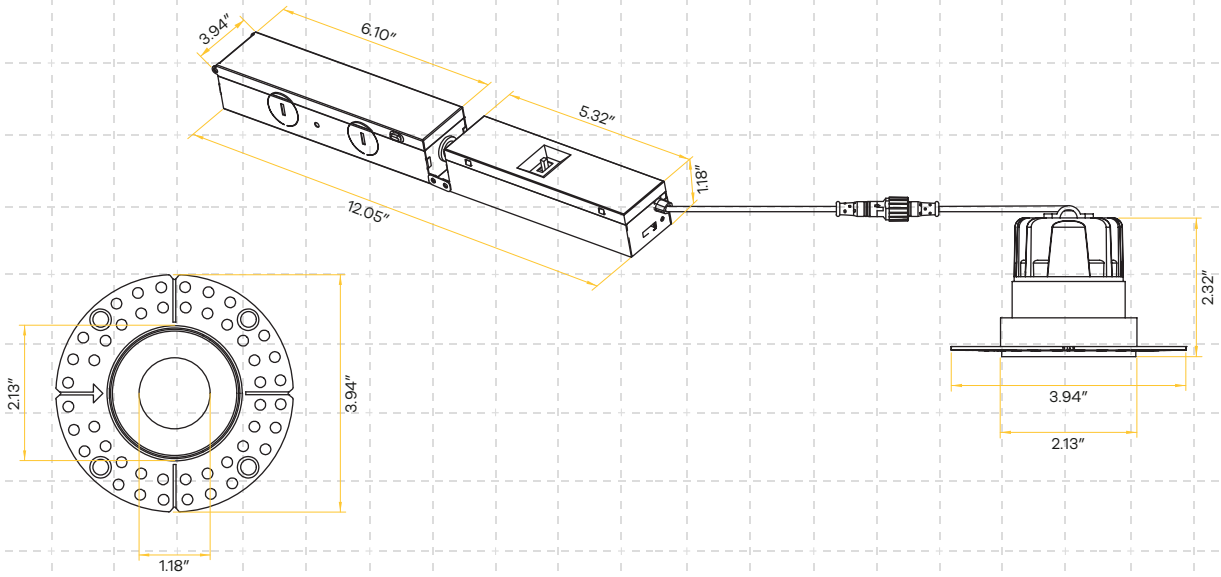

G-96721

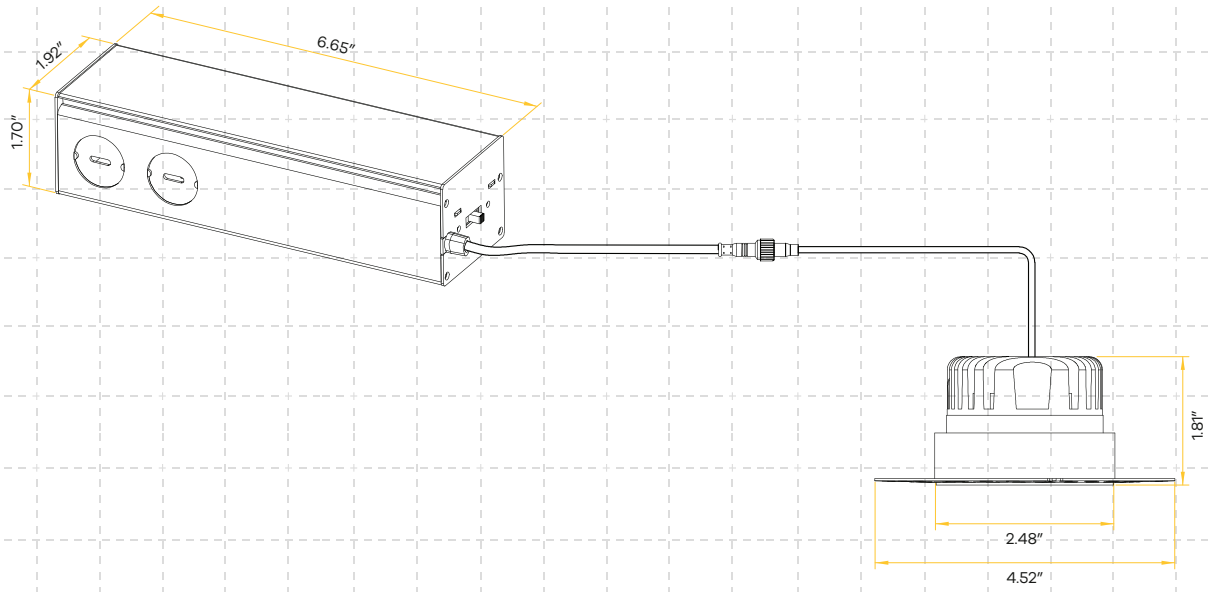

Dimensions

G-96722

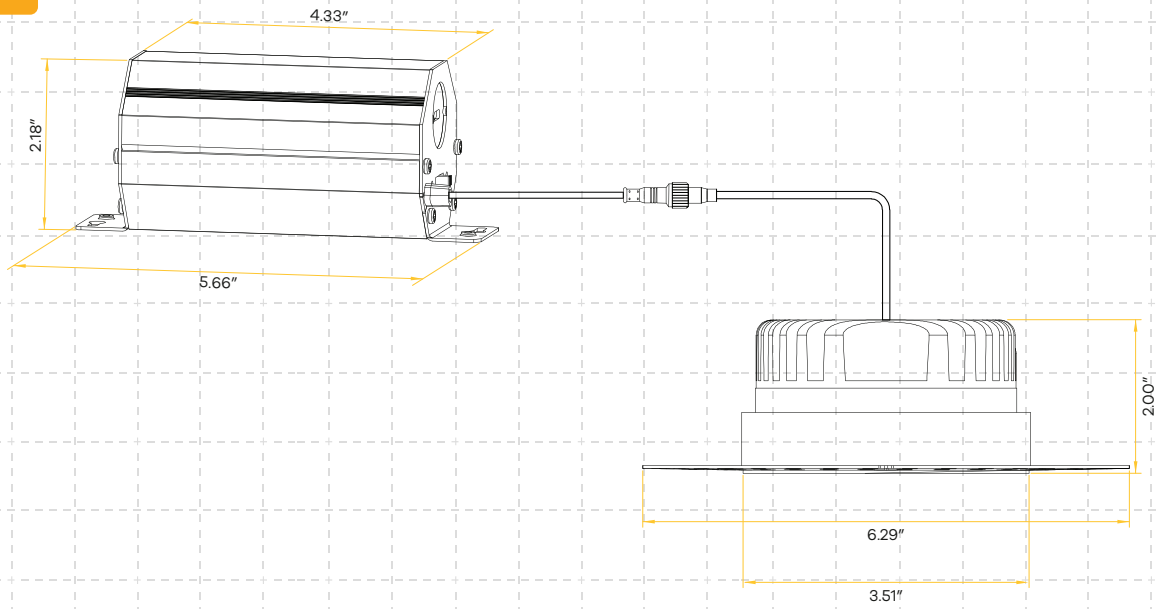

Made In China
Goodlite Products. Tinton Falls NJ 07753.