Saturn 2" Trimmed Multiple

5 Selectable Color | 90+ CRI 90+ True Colors | Wet Location | Air Tight | Dimmable | IC Rated | Closet Rated | ETL US | FC

G-48314

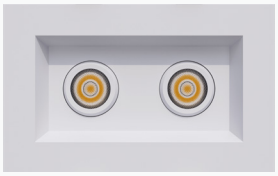

Product Information

Description	R2/10W/GR/M2/LED/5CCT	Output volts	33-38V
Color temp	27, 30, 35, 41, 50k	Dimmable	Triac or 0-10V
Output lumens	900 (450 each head)	Cut out	2.70" x 5.12"
Beam angle	40°	OD	3.99" x 6.39"
Tilt angle	30°	Height	2.30"
Input volts	120-277V	Wire space	10.9" Sq
Wattage	10W	Warranty	5 Years
CRI	90>	Plate	G-48318 0 Punch Out
mA	230mA	Packed	18

G-48315

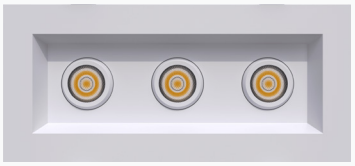

Product Information

Description	R2/15W/GR/M3/LED/5CCT	Output volts	33-38V
Color temp	27, 30, 35, 41, 50k	Dimmable	Triac
Output lumens	1200 (400 each head)	Cut out	2.70" x 7.48"
Beam angle	40°	OD	3.99" x 8.75"
Tilt angle	30°	Height	2.30"
Input volts	120V	Wire space	10.9" Sq
Wattage	15W	Warranty	5 Years
CRI	90>	Plate	G-48318 2 Punch Out
mA	350mA	Packed	18

Made In China
Goodlite Products. Tinton Falls NJ 07753.

Accessories



Emergency LED Driver
15W G-48410
25W G-95525
30W G-48411
60W G-95521



Extension Cords
5ft G-20247
10ft G-20248
20ft G-19822
30ft G-19823



120-277V Drivers (0-10 Dimming)
For G-48314 use G-48319
For G-48315 use G-48320

Dimensions

Double Head

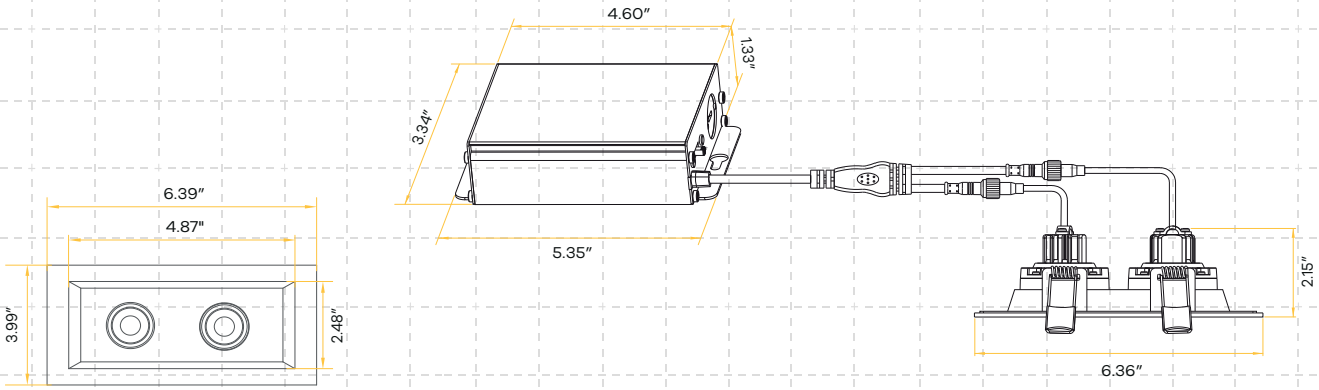

Triple Head

