Saturn 3.5" Trimmed Multiple

Selectable Color | CRI 90+ True Colors | Wet Location | Air Tight | Dimmable | IC Rated

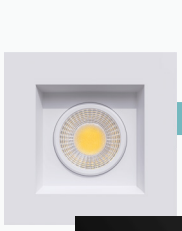

G-48441

R3.5/14W/GR/M1/LED/5CCT

White

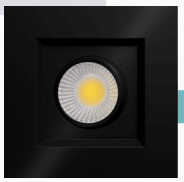

G-48440

R3.5/14W/GR/M1/LED/5CCT/BK

Black

Product Information

Color temp	27, 30, 35, 41, 50k	Dimmable	Triac or 0-10 Dimming
Output lumens	1400	Cut out	SQ 4.00" - RD 5.15"
Beam angle	40°	OD	5.80"
Tilt angle	20°	Height	3.50"
Input volts	120-277V	Wire space	10.4" Sq
Wattage	14W	Warranty	5 Years
CRI	90>	Plate	G-98800 8 Punch Out
mA	350mA	Packed	18

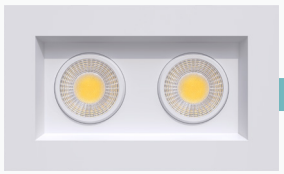

G-48442

R3.5/28W/GR/M2/LED/5CCT

White

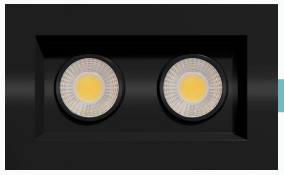

G-48444

R3.5/28W/GR/M2/LED/5CCT/B

Black

Product Information

Color temp	27, 30, 35, 41, 50k	Dimmable	Triac or 0-10 Dimming
Beam angle	40°	Cut out	3.94" x 7.68"
Tilt angle	20°	OD	5.85" x 9.60"
Input volts	120-277V	Height	3.55"
Wattage	28W	Warranty	5 Years
CRI	90>	Plate	G-48448 0 Punch Out
mA	650mA	Packed	12

	G-48442	G-48444
Output lumens	2800 (1400 each head)	2200 (1100 each head)

Made In China
Goodlite Products. Tinton Falls NJ 07753.

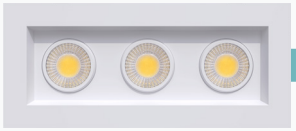

G-48443

R3.5/42W/GR/M3/LED/5CCT

White



G-48445

R3.5/42W/GR/M3/LED/5CCT/B

Black

Product Information

Color temp	27, 30, 35, 41, 50k	OD	5.85″ x 13.35″
Beam angle	40°	Height	3.55″
Tilt angle	20°	Wire space	10.9″ Sq
Wattage	42W	Warranty	5 Years
CRI	90>	Plate	G-48448 1 Punch Out
mA	1000mA	Packed	12
Cut out	3.94″ x 11.42″		

	G-48443	G-48445
Output lumens	3600 (1200 each head)	3300 (1100 each head)
Input volts	120-277V	120V
Dimmable	Triac or 0-10 Dimming	Yes (Triac)



G-97128

R3.5/52W/GR/M4/LED/5CCT

White



G-97129

R3.5/52W/GR/M4/LED/5CCT/BK

Black

Product Information

Color temp	27, 30, 35, 41, 50k	Dimmable	Triac or 0-10 Dimming
Output lumens	4800 (1200 each head)	Cut out	4.00″ x 15.30″
Beam angle	40°	OD	5.85″ x 17.05″
Tilt angle	20°	Height	3.55″
Input volts	120-277V	Wire space	10.9″ Sq
Wattage	52W	Warranty	5 Years
CRI	90>	Plate	G-48449 2 Punch Out
mA	1250mA	Packed	6

Lens Options

Clear Lens



G-25621
SN/L3.5/40-DEGREE



G-25622
SN/L3.5/60-DEGREE

Accessories



Emergency LED Driver

15W G-48410
30W G-48411
25W G-95525
60W G-95521



Multi Driver Converter

For G-48441 / G-48440 /
use 14W G-95825



Extension Cords

5ft G-20247
10ft G-20248
20ft G-19822
30ft G-19823

Note: Emergency batteries must equal or exceed the fixture's maximum wattage.



120-277V Drivers (0-10 Dimming)

For G-48442 / G-48444
use G-48321
For G-48443 / G-48445
use G-48447

Dimensions

Single Head

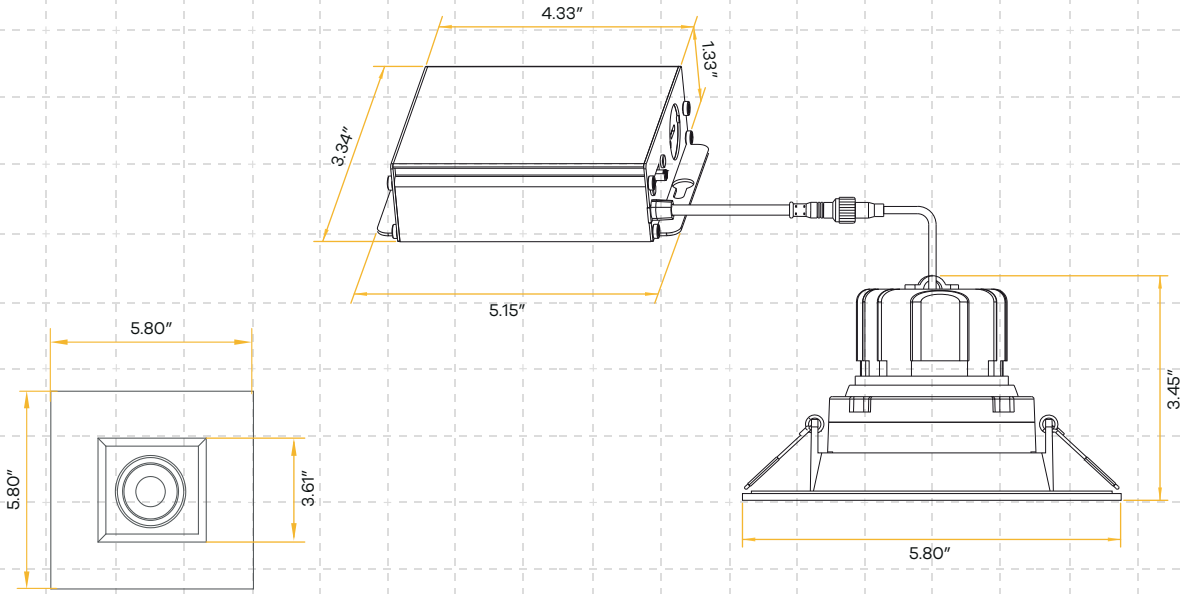

Made In China
Goodlite Products. Tinton Falls NJ 07753.

Dimensions

Double Head

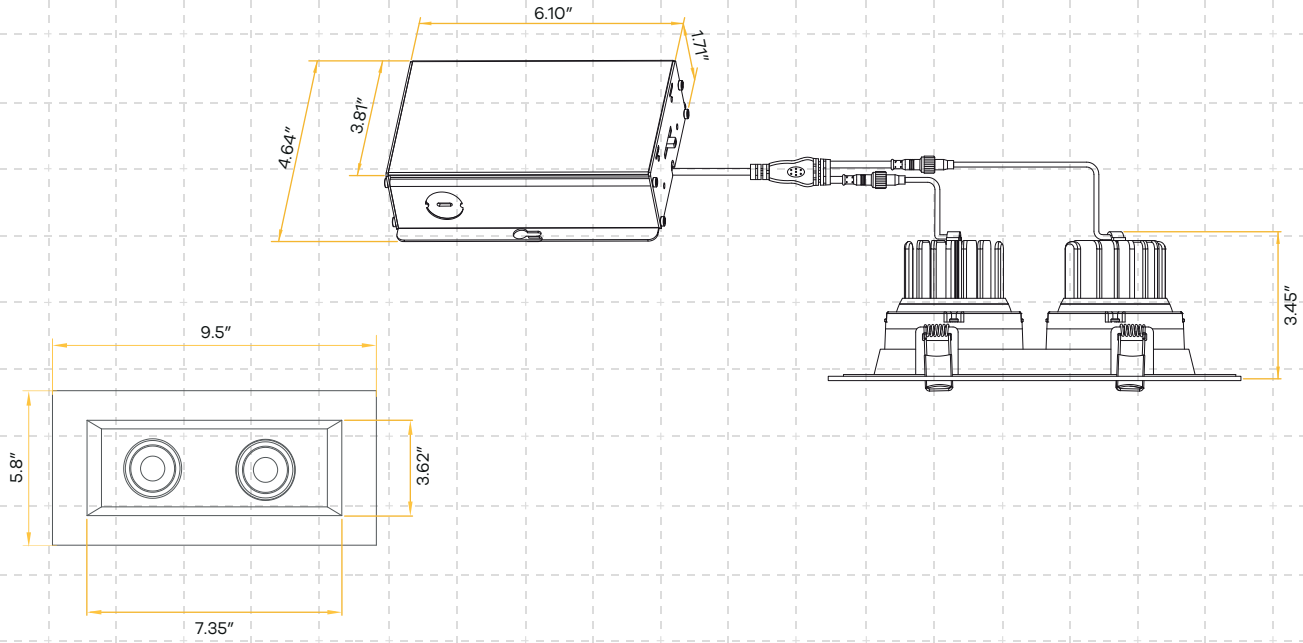

Triple Head

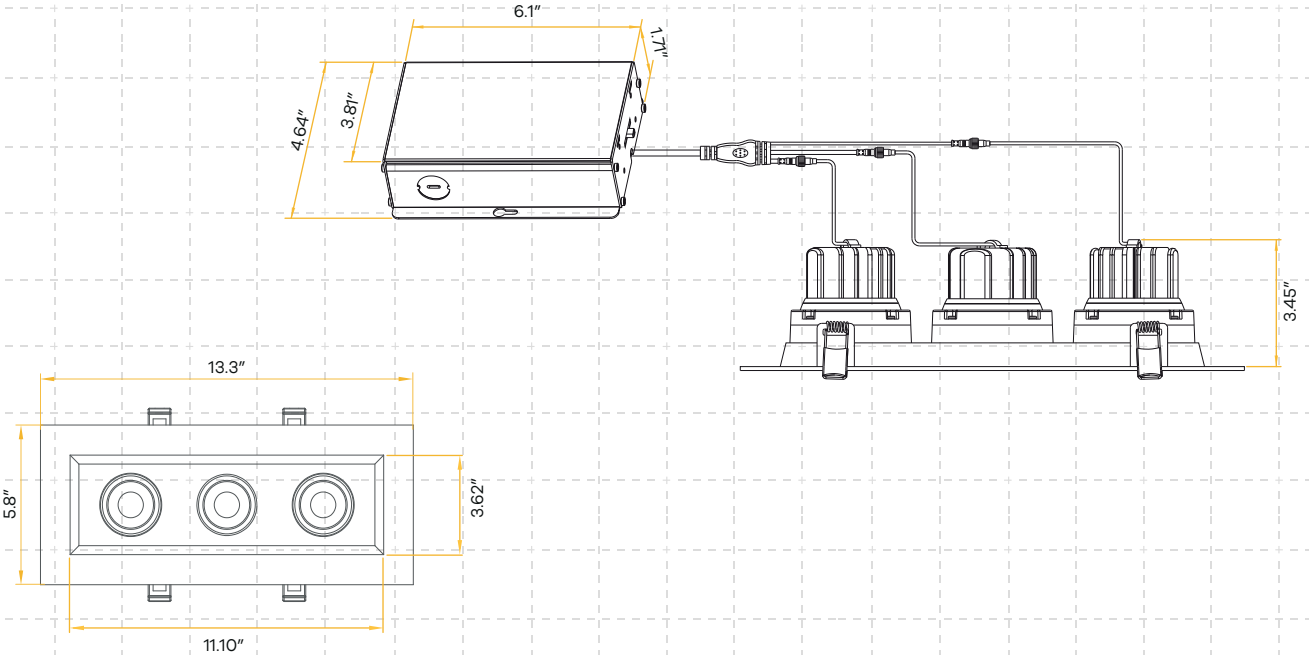

Dimensions

Four Head

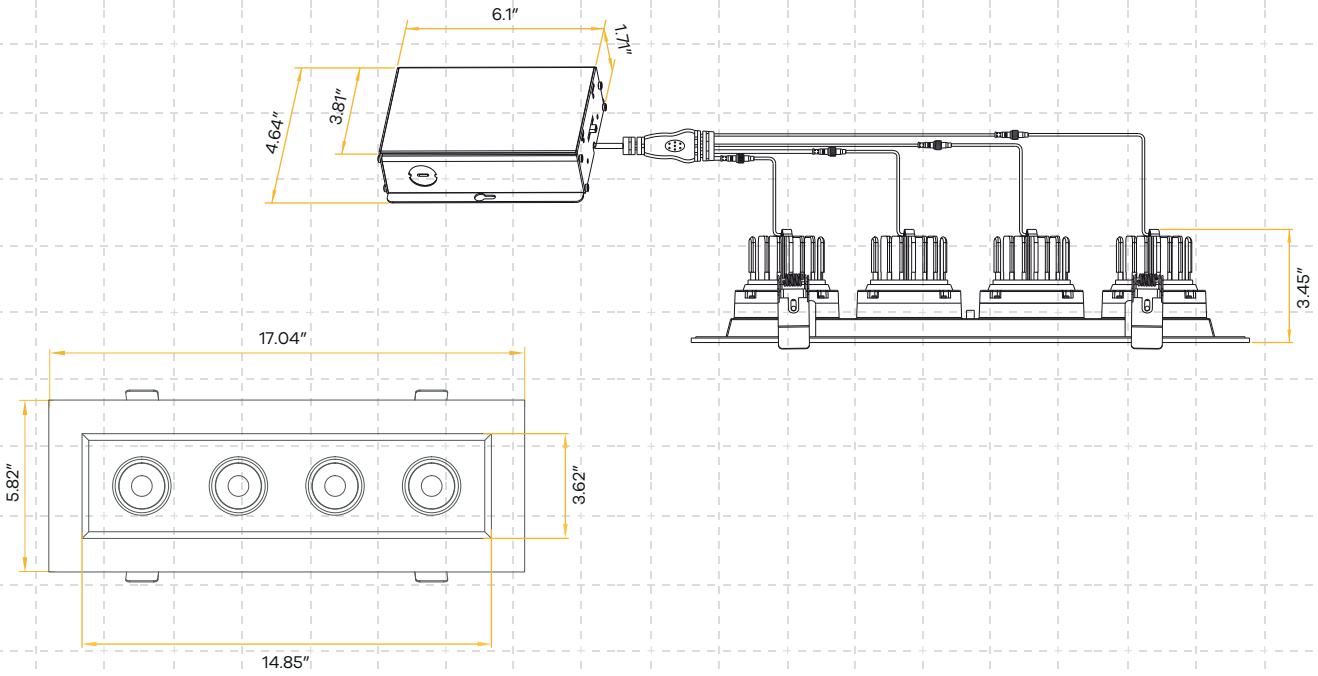

Made In China
Goodlite Products. Tinton Falls NJ 07753.