Saturn 3” Trimless Multiple

Selectable Color | CRI 90+ True Colors | Wet Location | 100° Beam Angle | Dimmable | IC Rated

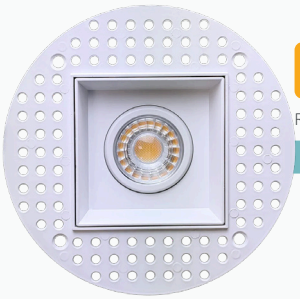

G-95620 Push & Release

R3/8W/GRS/LED/TL/5CCT

White

Product Information

Color temp	27, 30, 35, 41, 50k	Dimmable	Triac or 0-10 Dimming
Output lumens	800	Cut out	SQ 3.35” - RD 5.00”
Beam angle	40°	OD	6.30”
Tilt angle	30°	Height	2.75”
Input volts	120-277V	Warranty	5 Years
Wattage	8W	Plate	G-98800 8 Punch Out
CRI	90>	Packed	18
mA	170mA		

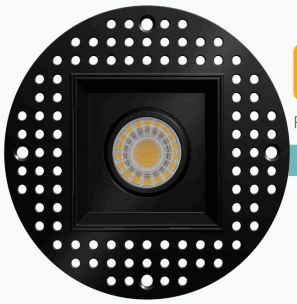

G-95720

R3/8W/GRS/LED/TL/5CCT/B

Black

Product Information

Color temp	27, 30, 35, 41, 50k	Dimmable	Yes (Triac)
Output lumens	700	Cut out	SQ 3.35” - RD 5.00”
Beam angle	40°	OD	6.30”
Tilt angle	30°	Height	2.65”
Input volts	120V	Warranty	5 Years
Wattage	8W	Plate	G-98800 8 Punch Out
CRI	90>	Packed	18
mA	170mA		

Made In China
Goodlite Products. Tinton Falls NJ 07753.

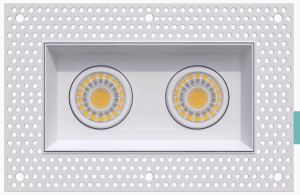

G-95621

R3/15W/GR/LED/M2/TL/5CCT

White

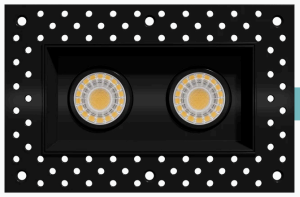

G-95721

Push & Release

R3/15W/GR/LED/M2/TL/5CCT/B

Black

Product Information

Color temp	27, 30, 35, 41, 50k	Dimmable	Triac or 0-10 Dimming
Output lumens	1400 (700 each head)	Cut out	3.35″ x 6.30″
Beam angle	40°	OD	5.60″ x 8.60″
Tilt angle	30°	Height	2.65″
Input volts	120/277V	Warranty	5 Years
Wattage	15W	Plate	G-48318 1 Punch Out
CRI	90>	Packed	18
mA	350mA		

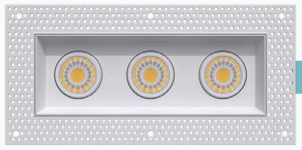

G-95622

R3/23W/GR/LED/M3/TL/5CCT

White

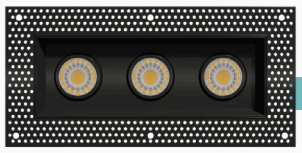

G-95722

R3/23W/GR/LED/M3/TL/5CCT/B

Black

Product Information

Color temp	27, 30, 35, 41, 50k	Dimmable	Yes (Triac)
Beam angle	40°	Cut out	3.35″ x 9.45″
Tilt angle	30°	OD	5.60″ x 11.58″
Input volts	120V	Height	2.65″
Wattage	23W	Warranty	5 Years
CRI	90>	Plate	G-48318 3 Punch Out
mA	525mA		

	G-95622	G-95722
Output lumens	1800 (600 each head)	1950 (650 each head)
Packed	18	6

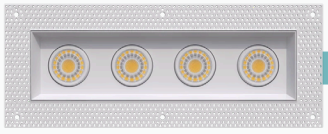

G-97126

R3/30W/GR/M4/LED/TL/5CCT

White

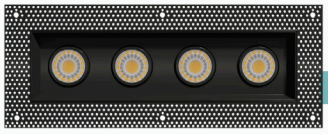

G-97127

R3/30W/GR/M4/LED/TL/5CCT/BK

Black

Product Information

Color temp	27, 30, 35, 41, 50k	Dimmable	Triac or 0-10 Dimming
Output lumens	2800 (700 each head)	Cut out	3.35″ x 12.50″
Beam angle	40°	OD	5.60" x 14.66"
Tilt angle	30°	Height	2.65"
Input volts	120-277V	Warranty	5 Years
Wattage	30W	Plate	G-48449 1 Punch Out
CRI	90>	Packed	6
mA	750mA		

Lens Options

Clear Lens



G-01420
FL/L3/24-DEGREE



G-01421
FL/L3/40-DEGREE



G-01422
FL/L3/60-DEGREE

Accessories



Emergency LED Driver
15W G-48410
25W G-95525
30W G-48411
60W G-95521



Multi Driver Converter
For G-95620 / G-95720 /
use 8W G-95823



Extension Cords
5ft G-20247
10ft G-20248
20ft G-19822
30ft G-19823

Note: Emergency batteries must equal or exceed the fixture's maximum wattage.



120-277V Drivers (0-10 Dimming)
For G-95620 / G-95720
use G-48300
For G-95621 / G-95721
use G-48321
For G-95622 / G-95722
use G-48322

Dimensions

White Single Head

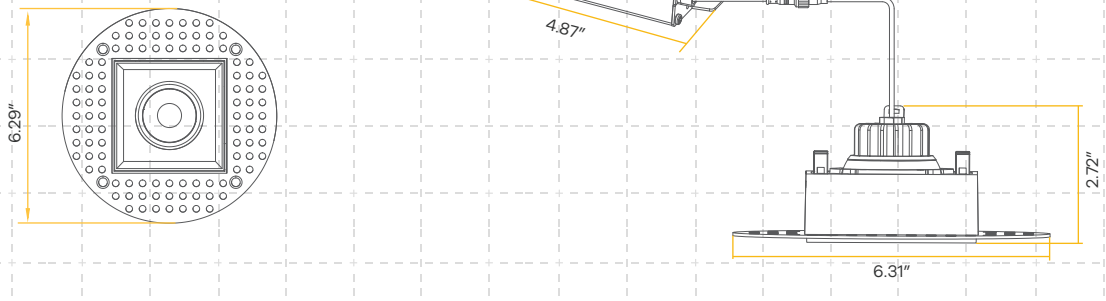

Made In China
Goodlite Products. Tinton Falls NJ 07753.

Dimensions

Black Single Head

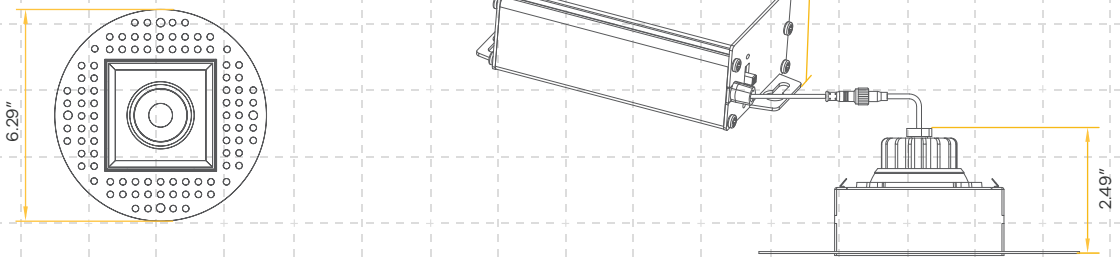

White Double Head

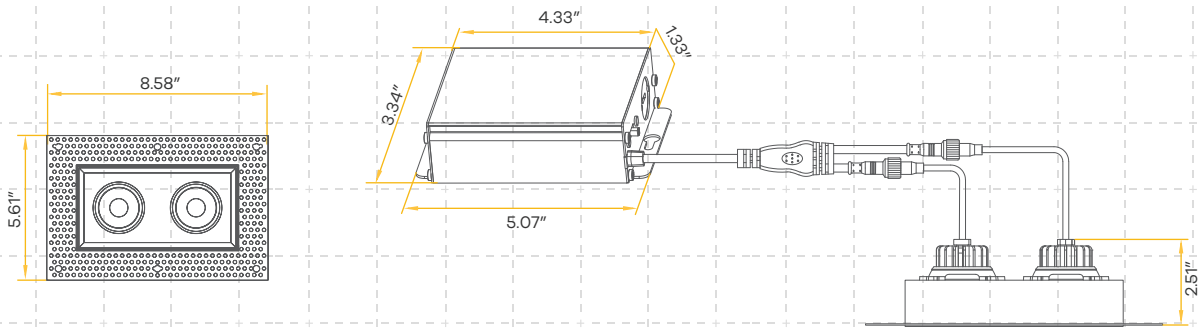

Black Double Head

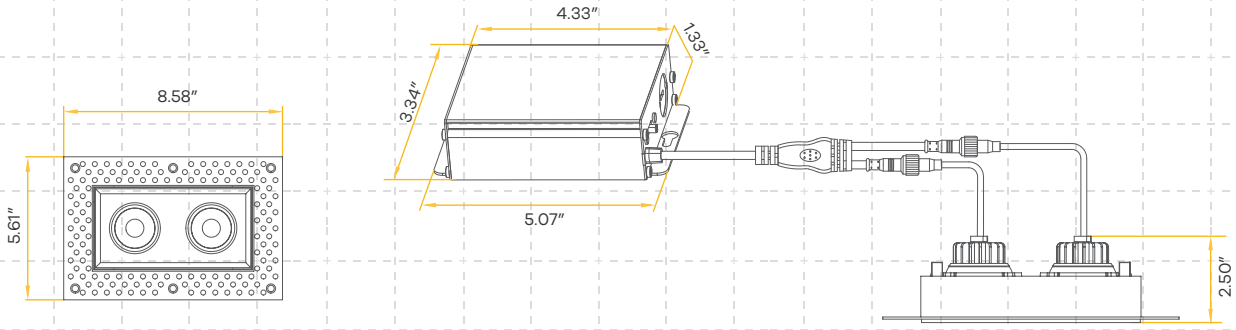

Dimensions

Triple Head

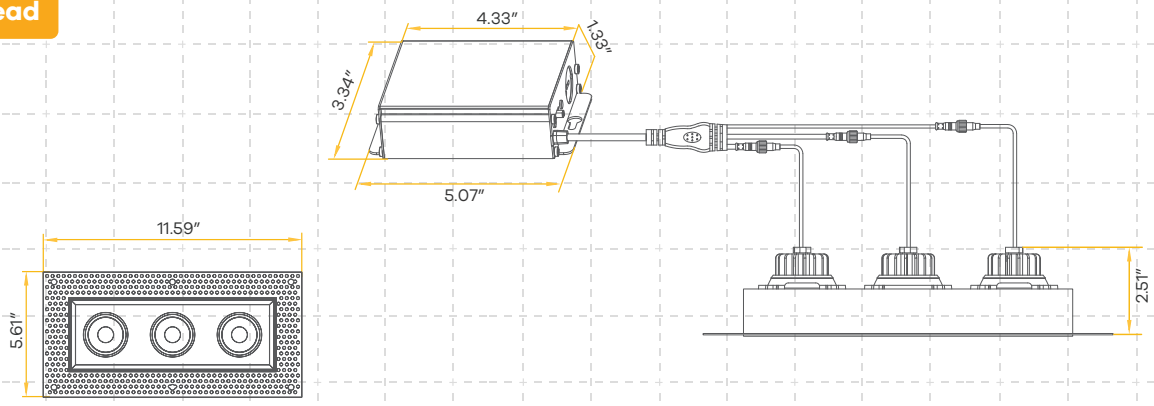

Four Head

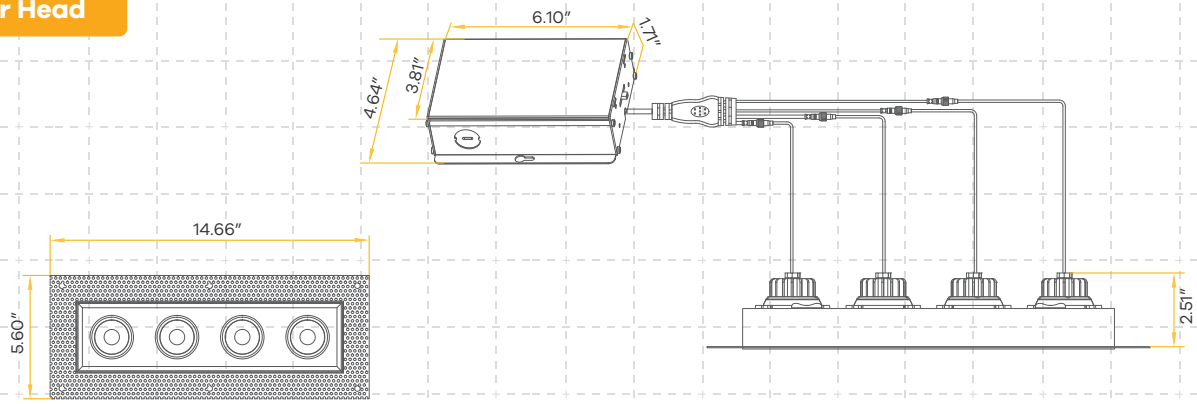

Made In China
Goodlite Products. Tinton Falls NJ 07753.