Saturn 3" Trimmed Multiple

5 Selectable Color | 90+ CRI 90+ True Colors | Wet Location | Air Tight | Dimmable | IC Rated



Product Information

Color temp	27, 30, 35, 41, 50k	Cut out	3.35"
Beam angle	40°	OD	4.33"
Tilt angle	30°	Height	2.48"
Wattage	8W	Warranty	5 Years
CRI	90>	Plate	G-98800 5 Punch Out
mA	170mA	Packed	18

	G-20090	G-48363
Output lumens	800	650
Input volts	120-277V	120V
Dimmable	Triac Or 0-10V	Yes



Product Information

Color temp	27, 30, 35, 41, 50k	Dimmable	Triac or 0-10 Dimming
Beam angle	40°	Cut out	3.35" x 6.30"
Tilt angle	30°	OD	5.08" x 8.08"
Input volts	120-277V	Height	2.70"
Wattage	15W	Wire space	10.9" Sq
CRI	90>	Warranty	5 Years
mA	350mA	Plate	G-48318 1 Punch Out
CRI	90>	Packed	18
mA	350mA		

	G-48316	G-48464
Output lumens	1400 (700 each head)	1200 (600 each head)

Made In China
Goodlite Products. Tinton Falls NJ 07753.

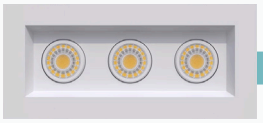

G-48317

R3/23W/GR/M3/LED/5CCT

White



G-48465

R3/23W/GR/M3/LED/5CCT/B

Black

Product Information

Color temp	27, 30, 35, 41, 50k	Dimmable	Triac Or 0-10V
Output lumens	2200 (725 each head)	Cut out	3.35″ x 9.45″
Beam angle	40°	OD	5.08″ x 11.08″
Tilt angle	30°	Height	2.70″
Input volts	120-277V	Wire space	10.9″ Sq
Wattage	23W	Warranty	5 Years
CRI	90>	Plate	G-48318 3 Punch Out
mA	525mA	Packed	18

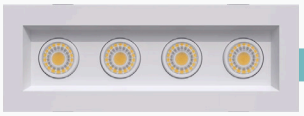

G-97124

R3/30W/GR/M4/LED/5CCT

White



G-97125

R3/30W/GR/M4/LED/5CCT/B

Black

Product Information

Color temp	27, 30, 35, 41, 50k	Dimmable	Triac or 0-10 Dimming
Output lumens	2800 (700 each head)	Cut out	3.35″ x 12.50″
Beam angle	40°	OD	5.08″ x 14.07″
Tilt angle	30°	Height	2.70″
Input volts	120-277V	Wire space	5 Years
Wattage	30W	Warranty	2.70″
CRI	90>	Plate	G-48449 1 Punch Out
mA	750mA	Packed	6
Output volts	33-38V		

Lens Options

Clear Lens



G-01420
FL/L3/24-DEGREE



G-01421
FL/L3/40-DEGREE



G-01422
FL/L3/60-DEGREE

Accessories



Emergency LED Driver

15W G-48410
25W G-95525
30W G-48411
60W G-95521



Multi Driver Converter

For G-20090 / G-48363 / G-48364 / G-48365 / G-48369
use 8W G-95823



Extension Cords

5ft G-20247
10ft G-20248
20ft G-19822
30ft G-19823

Dimensions

Single Head

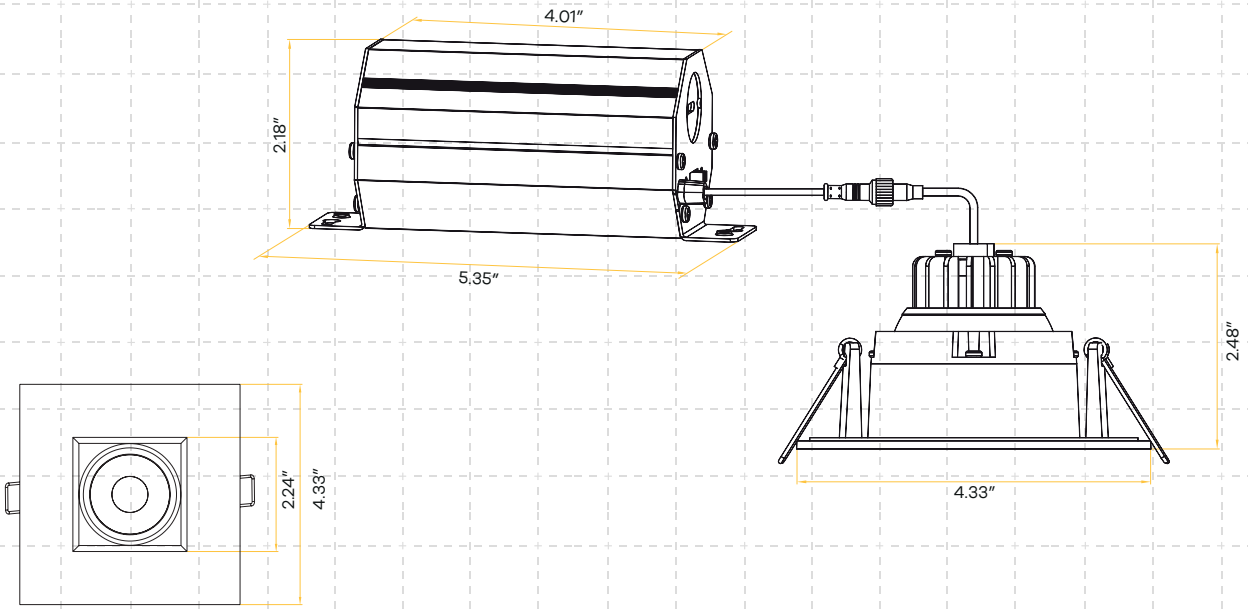

Double Head

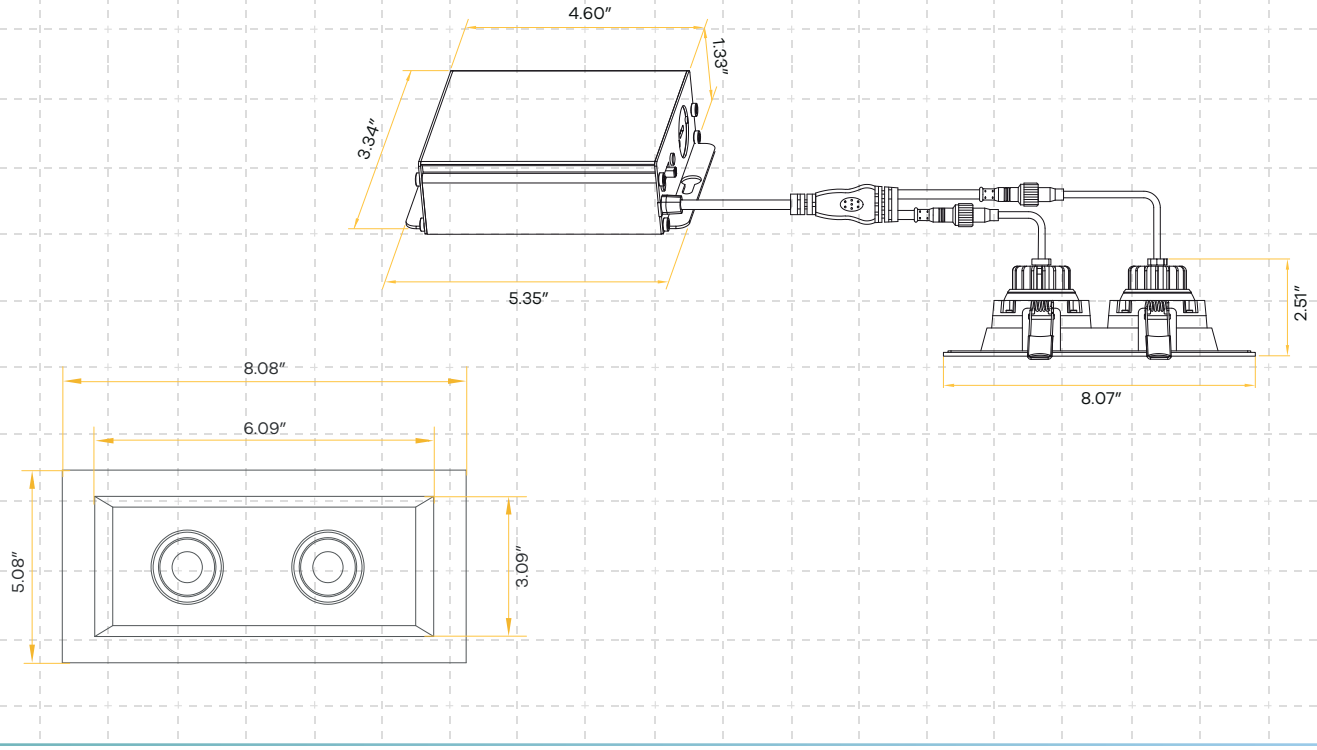

Made In China
Goodlite Products. Tinton Falls NJ 07753.

Dimensions

Triple Head

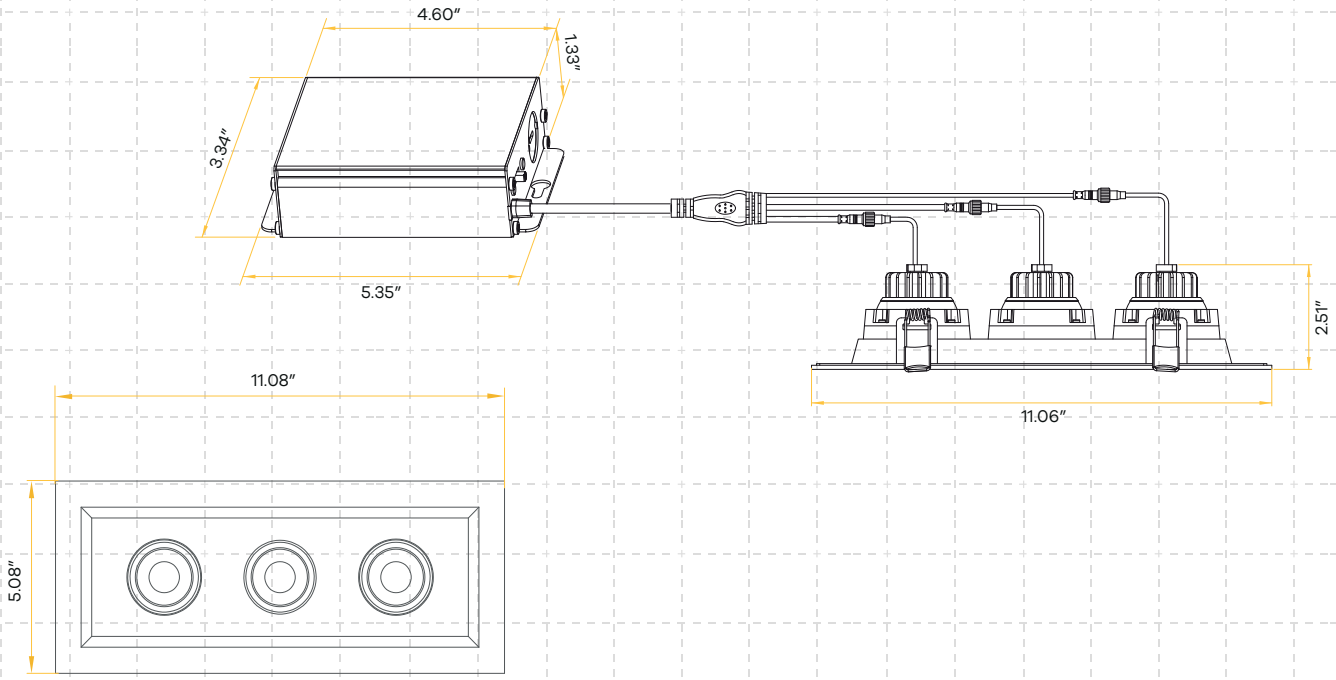

Four Head

