Goodlite

Saturn 4" Round Trimless Regress

5 Selectable Color | 90+ CRI 90+ True Colo rs | Wet Location | Dimmable | IC Rated

CLOSET RATED | ETL LISTED | FC

G-48404



Product Information

Description	R4/13W/GR/LED/TL/5CCT	mA	270mA
Color temp	27, 30, 35, 41, 50k	Dimmable	Triac
Trim finish	White	Cut out	4.50″
Output lumens	1000	OD	6.69″
Beam angle	40°	Height	3.07″
Tilt angle	30°	Warranty	3 Years
Input volts	120V	Plate	G-98800 7 Punch Out
Wattage	13W	Packed	18
CRI	90>		

G-48405



Product Information

Description	R4/13W/GR/LED/TL/5CCT/BK	mA	270mA
Color temp	27, 30, 35, 41, 50k	Dimmable	Triac
Trim finish	Black	Cut out	4.50″
Output lumens	1000	OD	6.69″
Beam angle	40°	Height	3.07″
Tilt angle	30°	Warranty	3 Years
Input volts	120V	Plate	G-98800 7 Punch Out
Wattage	13W	Packed	18
CRI	90>		

Made In China
Goodlite Products. Tinton Falls NJ 07753.

G-95820



Product Information

Description	R4/17W/GR/LED/TL/5CCT	mA	400mA
Color temp	27, 30, 35, 41, 50k	Dimmable	Triac or 0-10
Trim finish	White	Cut out	4.50″
Output lumens	1500	OD	6.69″
Beam angle	60°	Height	4.00″
Tilt angle	30°	Warranty	3 Years
Input volts	120-277V	Plate	G-98800 7 Punch Out
Wattage	17W	Packed	18
CRI	90>		

G-95821



Product Information

Description	R4/17W/GR/LED/TL/5CCT/BK	mA	400mA
Color temp	27, 30, 35, 41, 50k	Dimmable	Triac Or 0-10V
Trim finish	Black	Cut out	4.50″
Output lumens	1500	OD	6.69″
Beam angle	60°	Height	4.00″
Tilt angle	30°	Warranty	3 Years
Input volts	120-277V	Plate	G-98800 7 Punch Out
Wattage	17W	Packed	18
CRI	90>		

Accessories



Emergency LED Driver

15W G-48410
25W G-95525
30W G-48411
60W G-95521



Extension Cords

6ft G-20210
10 ft G-20211

Note: Emergency batteries must equal or exceed the fixture's maximum wattage. Keep in mind that these fixtures feature selectable wattage.

Dimensions

Regular

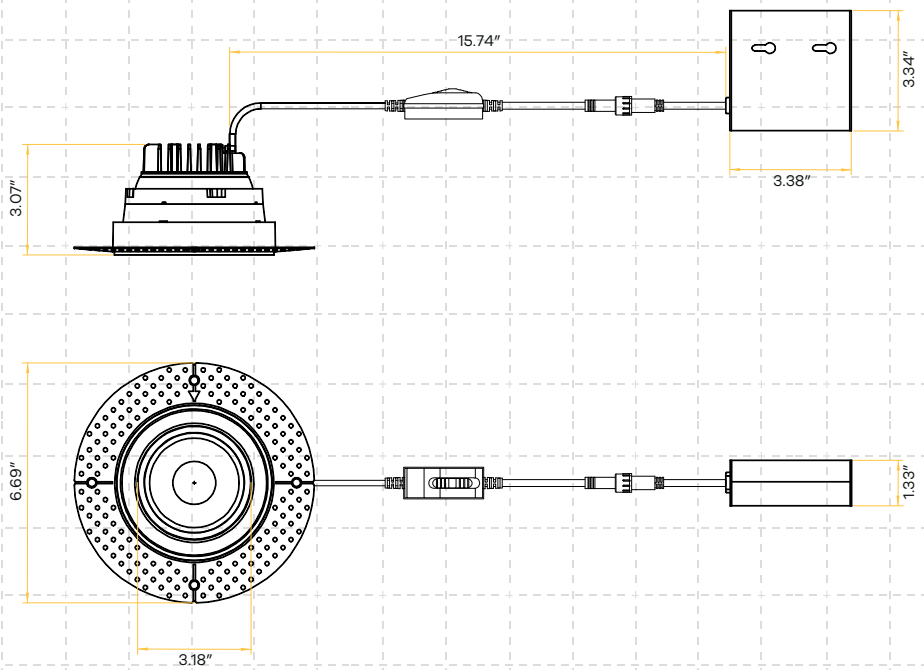

High Output

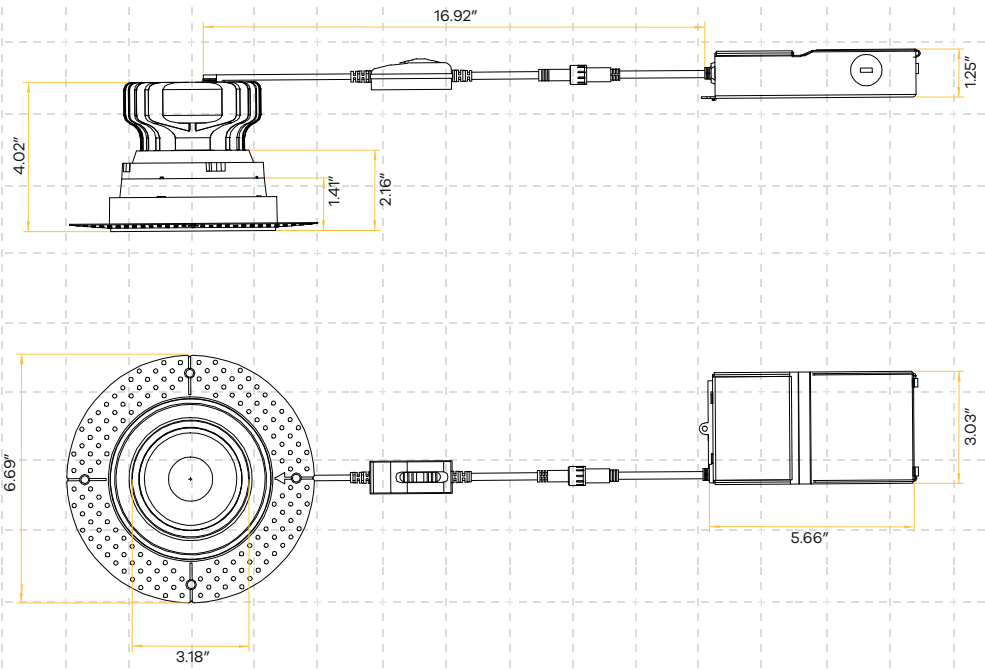

Made In China
Goodlite Products. Tinton Falls NJ 07753.