Saturn 4 Trimmed Multiple

5 Selectable Color | 90+ CRI 90+ True Colors | Wet Location | Air Tight | Dimmable

CLOSET RATED | JA8 TITLE 24 | ETL LISTED | FC



G-97425

R4/20W/GSR/LED/5CCT

White

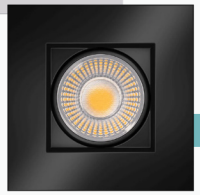

G-97426

R4/20W/GSR/LED/5CCT/BK

Black

Product Information

Color temp	27, 30, 35, 41, 50k	Dimmable	Triac Or 0-10V
Output lumens	1750	Plenum rated	FT6
Beam angle	60°	Cut out	4.55″
Tilt angle	20°	OD	5.74″
Input volts	120-277V	Height	5.00″
Wattage	20W	Warranty	5 Years
CRI	90>	Plate	G-98800 8 Punch Out
mA	450mA	Packed	12



G-99022

SN/4/56W/GR/M2/5CCT/WH

White



G-99122

SN/4/56W/GR/M2/5CCT/BK

Black

Product Information

Color temp	27, 30, 35, 41, 50k	Dimmable	Triac or 0-10 Dimming
Output lumens	3200/5200	Plenum rated	FT6
Beam angle	60°	Cut out	4.65″ X 9.37″
Tilt angle	20°	OD	7.48″ X 12.51″
Input volts	120-277V	Height	5.32″
Wattage	36/56W	Wire space	14″ sq
CRI	90>	Warranty	5 Years
mA	900mA/1350mA	Plate	G-98823 1 Punch Out
IC rated	Only at 36W	Packed	4

Made In China
Goodlite Products. Tinton Falls NJ 07753.



G-99023

SN/4/84W/GR/M3/5CCT/WH

White



G-99123

SN/4/84W/GR/M3/5CCT/BK

Black

Product Information

Color temp	27, 30, 35, 41, 50k	Dimmable	Triac or 0-10 Dimming
Output lumens	4800/7800	Cut out	4.65″ X 14.40″
Beam angle	60°	OD	7.48″ X 17.55″
Tilt angle	20°	Height	5.32″
Input volts	120-277V	Wire space	14″ sq
Wattage	54/84W	Warranty	5 Years
CRI	90>	Plate	G-98823 3 Punch Out
mA	1350mA/2000mA	Packed	4
IC rated	Only at 54W		



G-99024

SN/4/112W/GR/M4/5CCT/WH

White



G-99124

SN/4/112W/GR/M4/5CCT/BK

Black

Product Information

Color temp	27, 30, 35, 41, 50k	Dimmable	Triac or 0-10 Dimming
Output lumens	6400/10400	Plenum rated	FT6
Beam angle	60°	Cut out	4.65″ X 19.50″
Tilt angle	20°	OD	7.48″ X 22.59″
Input volts	120-277V	Height	5.32″
Wattage	72/112W	Wire space	20″ sq
CRI	90>	Warranty	5 Years
mA	900mA x 2/1350mA x 2	Plate	G-98823 5 Punch Out
IC rated	Only at 72W	Packed	2

Lens Options

Clear Lens



G-25631

SN/L4/40-DEGREE



G-25632

SN/L4/60-DEGREE

Accessories



Emergency LED Driver

25W G-95525
30W G-48411
60W G-95521



Multi Driver Converter

For G-97425 / G-97426 /
use 20W G-95826



Extension Cords

5ft G-20247
10ft G-20248
20ft G-19822
30ft G-19823

Note: Emergency batteries must equal or exceed the fixture's maximum wattage. Keep in mind that these fixtures feature selectable wattage.

Dimensions

Single Head

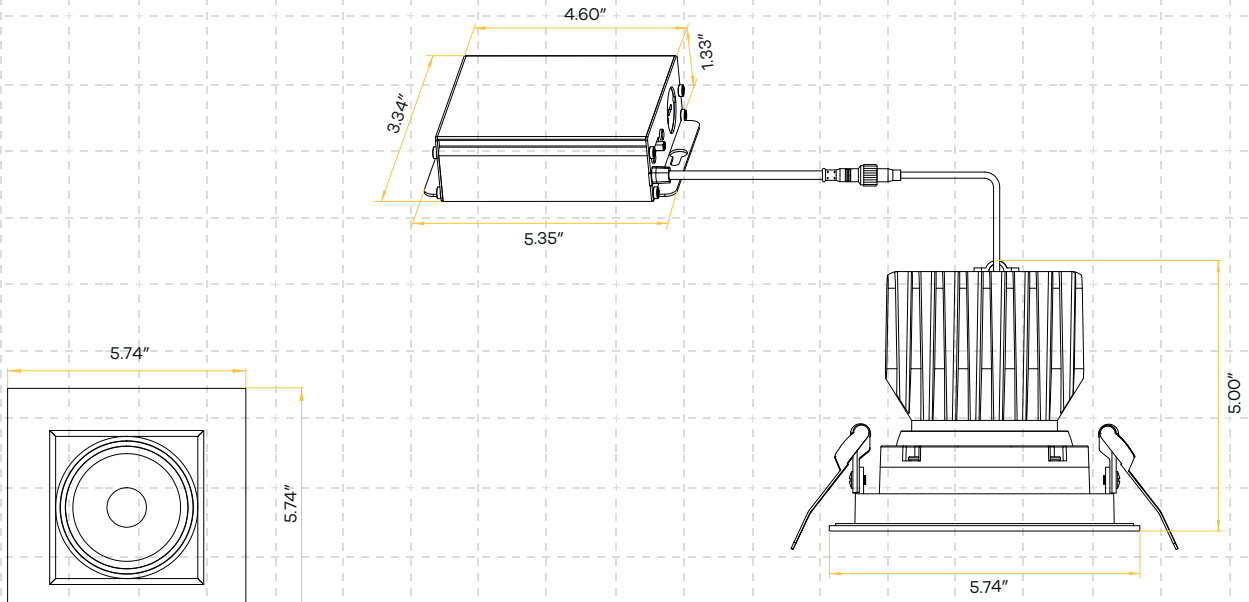

Made In China
Goodlite Products. Tinton Falls NJ 07753.

Dimensions

Double Head

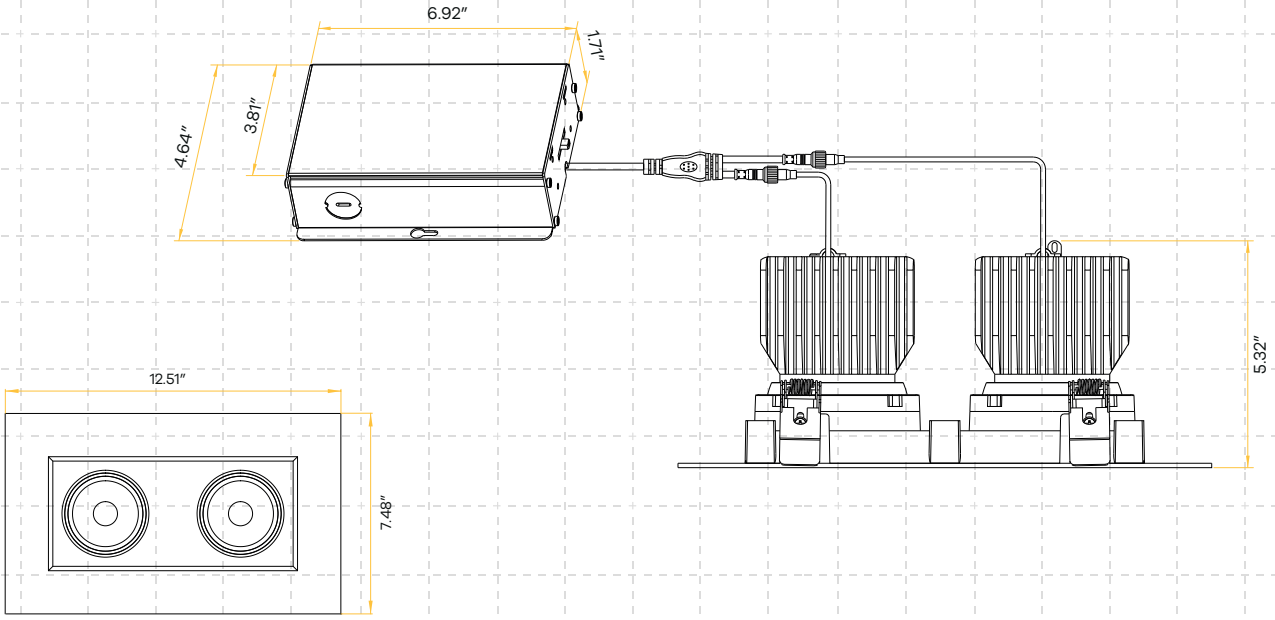

Triple Head

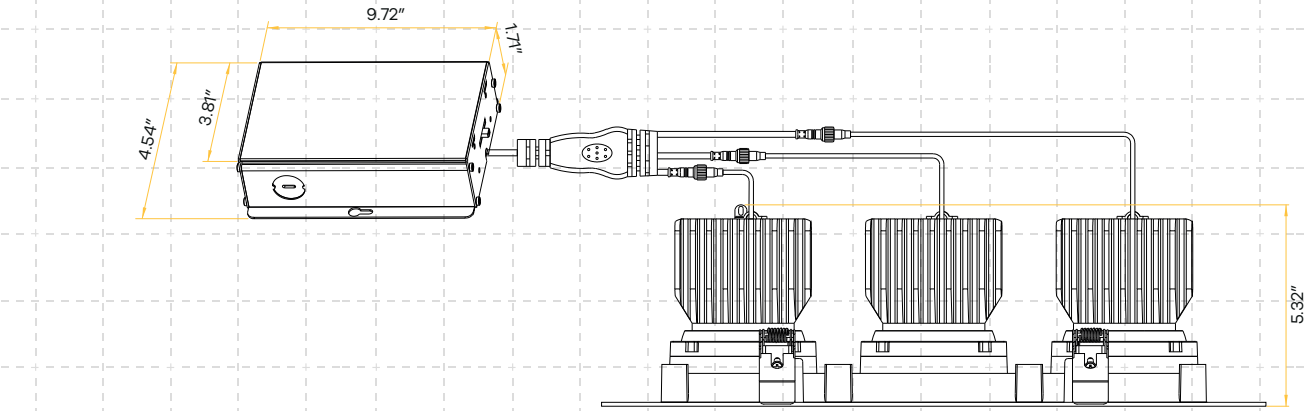

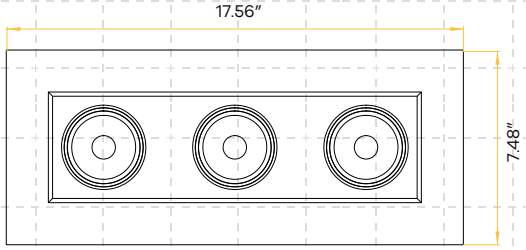

Dimensions

Four Head

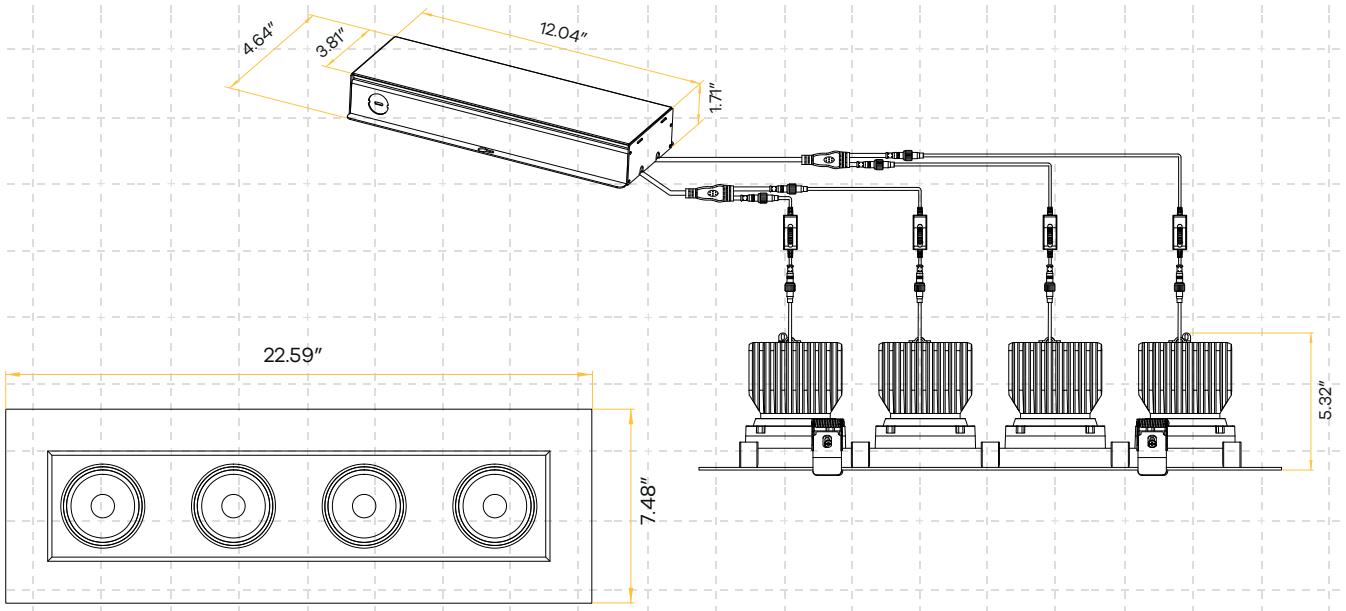

Made In China
Goodlite Products. Tinton Falls NJ 07753.